Syserco, Inc. reserves the right to modify the submittal package in accordance with field conditions.

CALIFORNIA SHAKESPEARE THEATER PHASE-1

100 GATEWAY BLVD, ORINDA CALIFORNIA 94563

ALERTON®
AUTHORIZED DEALER

BACtalk

ENERGY MANAGEMENT SYSTEM DIAGRAMS

FOR SUBMITTAL ONLY

AREA MAP

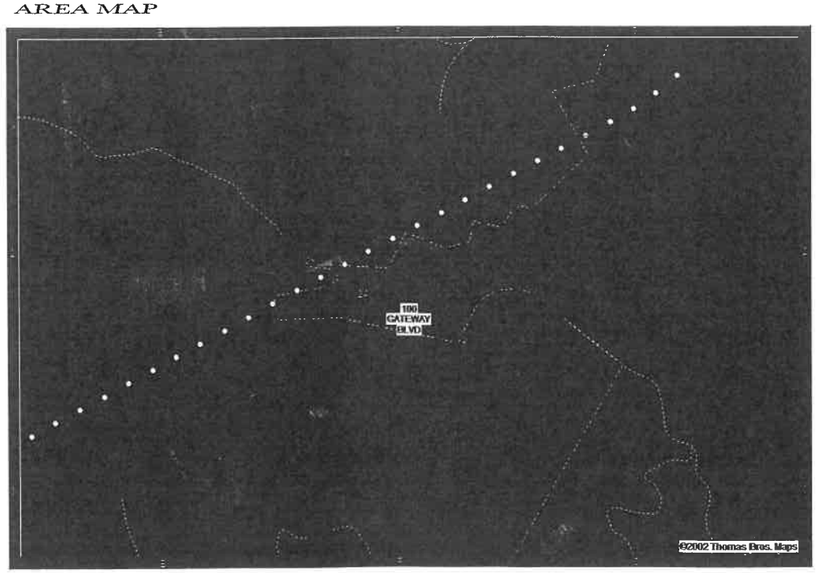

SITE LOCATION

VICINITY MAP

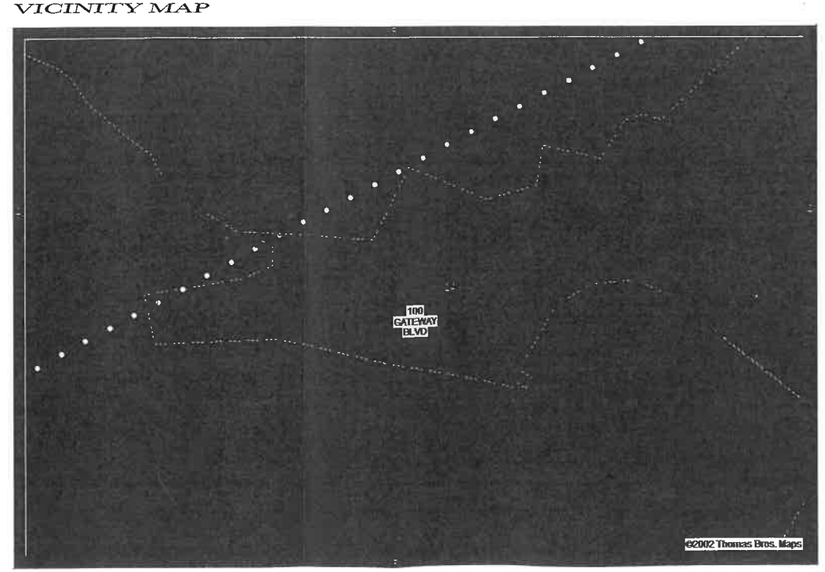

DRAWING INDEX

PAGE#	DESCRIPTION
CC 0.01A	TITLE SHEET
CC 0.02	GLOBAL DEVICE ADDRESS CHART
CC 0.03	BCM GLOBAL CONTROLLER WIRING DIAGRAM
CC 0.03P	BCM GLOBAL CONTROLLER PANLE LAYOUT
CC 0.04A	BCM-ETH # 201 ADDRESS CHART
CC 0.05A	SEQUENCE OF OPERATIONS
CC 0.06	BCM-ETH # 201 CONFIGURATION SETTINGS
CC 1.01A	TYPICAL HP-1 & HP-2 UNIT WIRING CONTROL DIAGRAM
CC 1.01P	TYPICAL HP-1 & HP-2 UNIT WIRING PANEL LAYOUT
CC 1.02A	TYPICAL EF-4 UNIT WIRING CONTROL DIAGRAM
CC 1.02P	TYPICAL EF-4 UNIT WIRING PANEL LAYOUT
CC 2.01	HEAT PUMP 1 & 2 FLOOR PLAN
CC 2.02	EXHAUST FAN 4 FLOOR PLAN

VERSION: XXXXXXXXXX

Syserco
Integrated Building Systems
Main Office:
44244 Fremont Blvd.
Fremont, CA 94538
510 498-1171
North Bay Office:
1425 N. McDowell Blvd
Suite 115
Petaluma, CA 94954
707 664-8443
www.syserco.com.
Cont. License # 483939

SYSERCO ENGINEER
AP

ENG. CHK | SALES CHK

DATE
10/21/09

ENGINEER
RUMSEY ENGINEERS
99 LINDEN STREET
OAKLAND, CA 94607
510.663.2070
510.663.2080 FAX

CONTRACTOR
OVERAA CONSTRUCTION
200 PARR BLVD
RICHMOND, CA 94801
510.234.0926
510.237.2435 FAX

△	DATE	DESCRIPTION	BY
	10/21/09	SUBMITTALS	AP
△1	04/28/10	REVISIONS #2	AP

PROJECT
CALIFORNIA SHAKESPEARE- PHASE 1
100 GATEWAY BLVD, ORINDA CA 94563

ALERTON® AUTHORIZED DEALER
BACtalk

FILE

JOB NUMBER
C0B021

SHEET I.D.
CC 0.01A

CALIFORNIA SHAKESPEARE THEATER GLOBAL DEVICE ADDRESS MAP

DEVICE ID	DEVICE TYPE	DESCRIPTION	USER	LOCATION	SYSERCO JOB#
0-9	Customer Equiment	RESERVED			
10	Server	RESERVED			
11-49	Customer Laptops	RESERVED			
50-99	Workstations	RESERVED			
51	DELL			LOOK AT FLOOR PLANS	
100-150	Syserco Laptops	RESERVED			
200-250	BCM'S	RESERVED			COB021
201	BCM-ETH	Global Controller		CALIFORNIA SHAKESPEARE THEATER- ORINDA, CALIFORNIA	COB021
202	BCM-WEB	Global Controller		CALIFORNIA SHAKESPEARE THEATER- ORINDA, CALIFORNIA	
300-530	Unitary Controllers	RESERVED			
1000-50000	Unitary Controllers	RESERVED			
1000-1999	VLC's	Unitary Controller		CALIFORNIA SHAKESPEARE THEATER- ORINDA, CALIFORNIA	COB021

GLOBAL DEVICE ADDRESS CHART

Syserco Integrated Building Systems

Main Office:
44244 Fremont Blvd.
Fremont, CA 94538
510 498-1171

North Bay Office:
1425 N. McDowell Blvd
Suite 115
Petaluma, CA 94954
707 664-8443
www.syserco.com
Cont. License # 483939

SYSERCO ENGINEER
AP

ENG. CHK | SALES CHK

DATE
10/21/09

ENGINEER
RUMSEY ENGINEERS
99 LINDEN STREET
OAKLAND, CA 94607
510.663.2070
510.663.2080 FAX

CONTRACTOR
OVERAA CONSTRUCTION
200 PARR BLVD
RICHMOND, CA 94801
510.234.0926
510.237.2435 FAX

△	DATE	DESCRIPTION	BY
	10/21/09	SUBMITTALS	AP
△1	04/28/10	REVISIONS #2	AP

PROJECT
CALIFORNIA SHAKESPEARE- PHASE 1
100 GATEWAY BLVD, ORINDA CA 94563

ALERTON® AUTHORIZED DEALER
BACtalk

FILE

JOB NUMBER
COB021

SHEET I.D.
CC 0.02

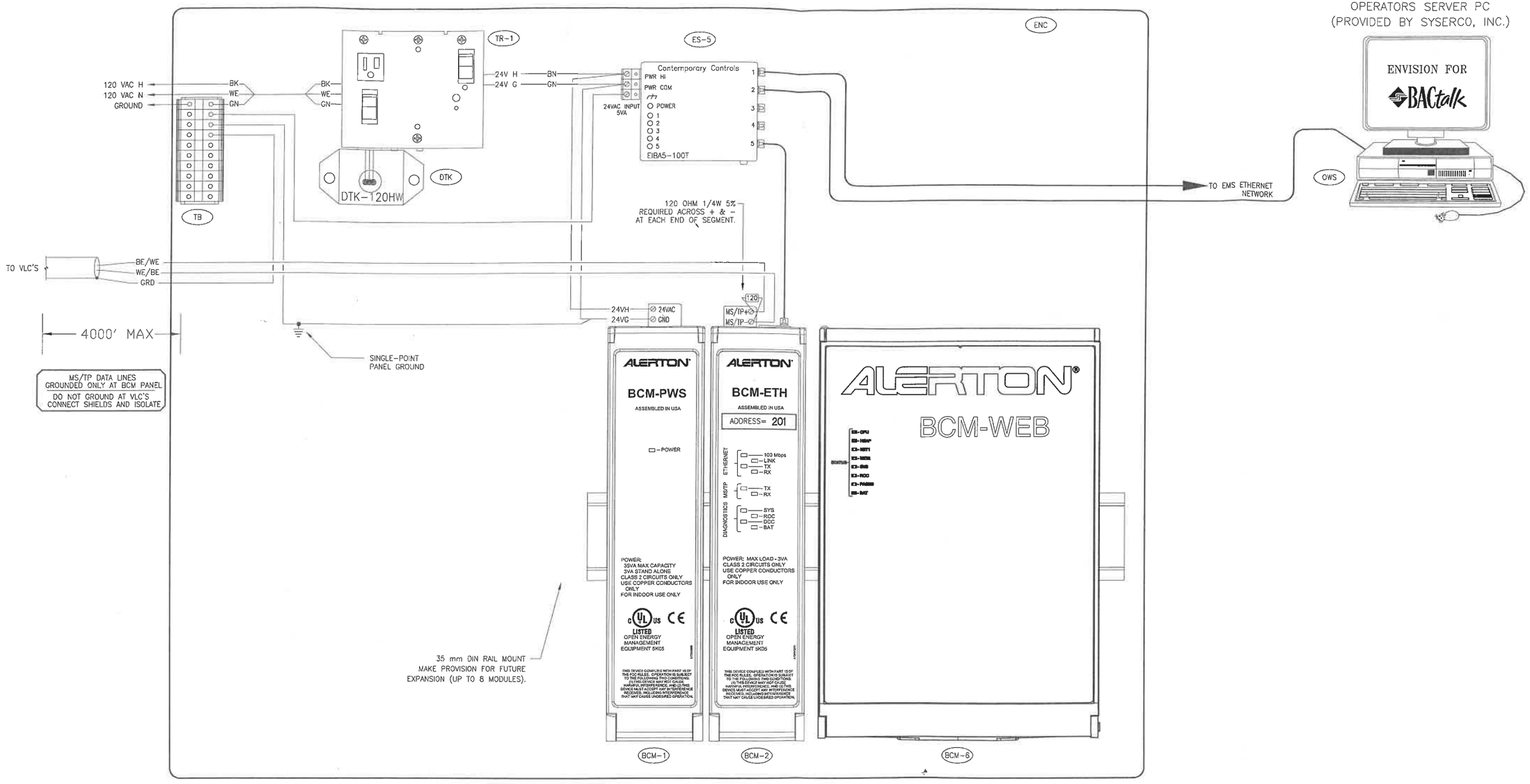

PANEL DEVICES				
TAG	QTY	PART NUMBER	DESCRIPTION	COMMENTS
ENC	1	A24N24ALP	HOFFMAN NEMA-1 24X24 ENCLOSURE	
	1	A24N24MP	HOFFMAN 24X24 MOUNTING PLATE	
	1	A-L12-B	HOFFMAN KEY LOCK KIT FOR TCP	
BCM-1	1	BCM-PWS	ALERTON BACtalk CONTROL MODULE	POWER SUPPLY
BCM-2	1	BCM-ETH	ALERTON BACtalk CONTROL MODULE	W/1 ETHERNET LAN, 1 MS/TP LAN
BCM-6	1	BCM-WEB	ALERTON BACtalk CONTROL MODULE	128 VLC SUPPORT, WEB CAPABILITY
TR-1	1	PSH100AWB10	FUNCTIONAL DEVICES. POWER SUPPLY	W/10 AMP SWITCH/BREAKER, INTERNAL WIRES
TB	10	165 113 16	ABB ENTRELEC GROUND BLOCK M4/6.P	24G (GREEN/YELLOW)
	1	103 062 21	ABB ENTRELEC FEM6 END SECTION	YELLOW
	2	103 002 26	ABB ENTRELEC BAM END STOP	GRAY
	1	176 667 04	ABB ENTRELEC ASSEMBLED JUMPER BAR	~~W/AP20 PROJECTION (10 POLES)~~
DTK	1	ALPS-DTK-120 HW	ALPS DITEK INDUSTRIAL SURGE PROTECTOR	
ES-5	1	EIBA5-100T	CONTEMPORARY CONTROL ETHERNET SWITCH	
FIELD DEVICES				
OWS	1	OPTIPLEX 360	DELL DESKTOP COMPUTER	

BCM GLOBAL CONTROLLER WIRING DIAGRAM

Syserco Integrated Building Systems
Main Office:
44244 Fremont Blvd.
Fremont, CA 94538
510 498-1171
North Bay Office:
1425 N. McDowell Blvd
Suite 115
Petaluma, CA 94954
707 664-8443
www.syserco.com
Cont. License # 483939

SYSERCO ENGINEER: AP

ENG. CHK | SALES CHK

DATE: 10/21/09

ENGINEER
RUMSEY ENGINEERS
99 LINDEN STREET
OAKLAND, CA 94607
510.663.2070
510.663.2080 FAX

CONTRACTOR
OVERAA CONSTRUCTION
200 PARR BLVD
RICHMOND, CA 94801
510.234.0926
510.237.2435 FAX

△	DATE	DESCRIPTION	BY
	10/21/09	SUBMITTALS	AP
2	04/29/10	REVISIONS #2	AP

PROJECT: *CALIFORNIA SHAKESPEARE- PHASE 1*
100 GATEWAY BLVD, ORINDA CA 94563

ALERTON AUTHORIZED DEALER
BACtalk

FILE

JOB NUMBER: C0B021

SHEET I.D.: CC 0.03

TYPICAL BCM GLOBAL CONTROLLER PANEL

HOFFMAN MEDIUM NEMA-1 ENCLOSURE – 24"x24"

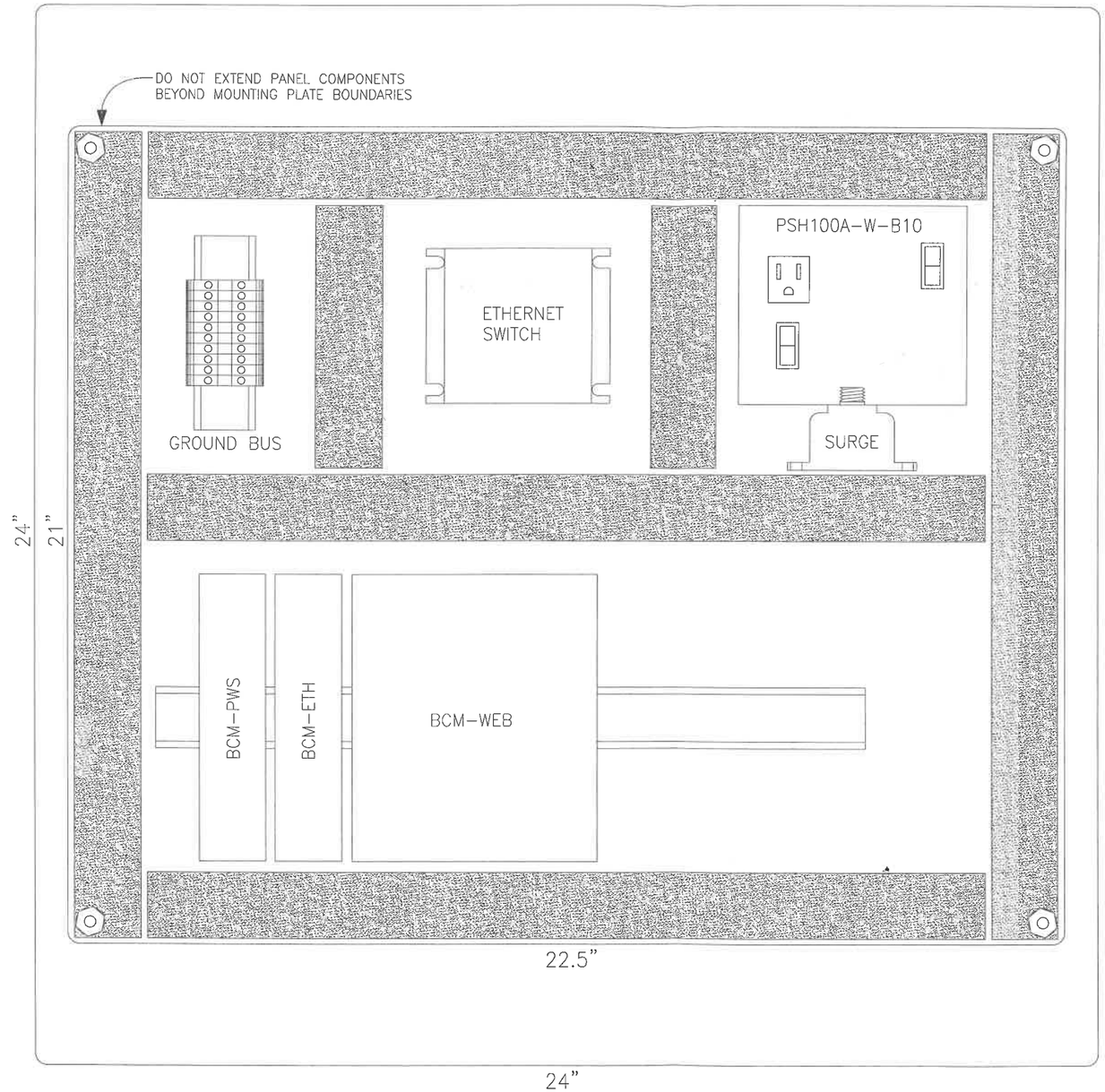

BCM GLOBAL CONTROLLER PANEL LAYOUT DIAGRAM

Syserco
Integrated Building Systems

Main Office:
44244 Fremont Blvd.
Fremont, CA 94538
510 498-1171

North Bay Office:
1425 N. McDowell Blvd
Suite 115
Petaluma, CA 94954
707 664-8443

www.syserco.com
Cont. License # 483939

SYSERCO ENGINEER
AP

ENG. CHK | *SALES CHK*

DATE
10/21/09

ENGINEER
RUMSEY ENGINEERS
99 LINDEN STREET
OAKLAND, CA 94607
510.663.2070
510.663.2080 FAX

CONTRACTOR
OVERAA CONSTRUCTION
200 PARR BLVD
RICHMOND, CA 94801
510.234.0926
510.237.2435 FAX

△	DATE	DESCRIPTION	BY
	10/21/09	SUBMITALS	AP
△1	04/28/10	REVISIONS #2	AP

PROJECT
CALIFORNIA SHAKESPEARE- PHASE 1
100 GATEWAY BLVD, ORINDA CA 94563

ALERTON® AUTHORIZED DEALER
BACtalk

FILE

JOB NUMBER
C0B021

SHEET I.D.
CC 0.03P

1	BCM-ETH NETWORK ADDRESS INFORMATION							
			Device Instance	201				
			Ethernet Network No.	10				
			Location					
	MS/TP LAN			NETWORK	2011			
Device Instance	MAC Add.	Dev.Type	Description	Serving	Bldg.	JOB NO.	INTERLOCK	DWG.
201	127		2					
1101	1	VLC-853	HP-1	DRESSING ROOM	THEATER	C0B021		CC 1.01
1102	2	VLC-853	HP-2	DRESSING ROOM	THEATER	C0B021		CC 1.01
1103	3							
1104	4	VLC-550	EF-4	BATHROOM EXHAUST	THEATER	C0B021		CC 1.02
1105	5							
1106	6							
1107	7							
1108	8							
1109	9							
1110	10							
1111	11							
1112	12							
1113	13							
1114	14							
1115	15							
1116	16							
1117	17							
1118	18							
1119	19							
1120	20							
1121	21							
1122	22							
1123	23							
1124	24							
1125	25							
1126	26							
1127	27							
1128	28							
1129	29							
1130	30							
1131	31							
1132	32							
1133	33							
1134	34							
1135	35							
1136	36							
1137	37							
1138	38							
1139	39							
1140	40							
1141	41							
1142	42							
1143	43							
1144	44							
1145	45							
1146	46							
1147	47							
1148	48							
1149	49							
1150	50							
1151	51							
1152	52							
1153	53							
1154	54							
1155	55							
1156	56							
1157	57							
1158	58							
1159	59							
1160	60							
1161	61							
1162	62							
1163	63							
1164	64							

BCM-ETH # 201 ADDRESS CHART

Syserco
Integrated Building Systems
Main Office:
44244 Fremont Blvd.
Fremont, CA 94538
510 498-1171
North Bay Office:
1425 N. McDowell Blvd
Suite 115
Petaluma, CA 94954
707 664-8443
www.syserco.com
Cont. License # 483939

SYSERCO ENGINEER
AP

ENG. CHK | SALES CHK

DATE
10/21/09

ENGINEER
RUMSEY ENGINEERS
99 LINDEN STREET
OAKLAND, CA 94607
510.663.2070
510.663.2080 FAX

CONTRACTOR
OVERAA CONSTRUCTION
200 PARR BLVD
RICHMOND, CA 94801
510.234.0926
510.237.2435 FAX

△	DATE	DESCRIPTION	BY
	10/21/09	SUBMITTALS	AP
△	04/28/10	REVISIONS #2	AP

PROJECT
CALIFORNIA SHAKESPEARE- PHASE 1
100 GATEWAY BLVD, ORINDA CA 94563

ALERTON® AUTHORIZED DEALER
BACtalk

FILE

JOB NUMBER
C0B021

SHEET I.D.
CC 0.04A

SEQUENCE OF OPERATION

[redacted] System Description

HEAT PUMP WITH ECONOMIZER

1. Each unit will be directly controlled by its own dedicated unitary controller. The DDC system will interface with units to provide the control.
2. Each unitary controller will be connected to a wall mounted electronic temperature sensor with LED or LCD display, push buttons for warmer, cooler, OSA temperature, room temperature, room set point, and after–hours override timer.
3. Heating operation: The controller compares the heating setpoint with the space temperature and determines a heating control signal to engage the reversing valve and compressor. Further call for heat shall engage the second stage of heating to maintain room setpoint.
4. Cooling operation: The controller compares the cooling setpoint with the space temperature and determines a cooling signal. The call for cooling will enable the economizer to provide free cooling for as long as possible. The first stage will stage the compressor to turn on compressor one. The second stage will stage the compressor two to turn on to maintain the room set point.
5. Fan Operation: During the occupied mode, the DDC system sends an occupied signal to the integrated unit controller and the fan runs. During unoccupied mode, the fan cycles with demand. A timer keeps the fan on for 1 minute after the demand is satisfied to dissipate any energy in the coil. The temperature is controlled by the night cooling and heating setpoints. Interlock exhaust fans as shown on schedule.
6. Minimum Outside Air Ventilation: When in the occupied mode, the controller shall measure the zone CO2 levels and open the outside air dampers on rising CO2 concentrations, overriding normal damper operation. On HP–1 as CO2 concentrations is less than 900 ppm the dampers shall provide minimum outdoor air cfm of 100, when CO2 is equal to and above 900 ppm the damper shall provide minimum outdoor air cfm of 550. On HP–2 as CO2 concentrations is less than 900 ppm the dampers shall provide minimum outdoor air cfm of 280, when CO2 is equal to and above 900 ppm the damper shall provide minimum outdoor air cfm of 370. When in economizer mode, the HP–1 shall provide minimum of 550 cfm of outdoor air, on HP–2 shall provide minimum of 370 of outdoor air.
7. Filter Differential Pressure Monitor: The controller shall monitor the differential pressure across the filter. When filter differential pressure exceeds a user definable limit (adj.) and alarm will trigger.
8. Monitoring – The following conditions shall be monitored:
   a. Supply air temperature.
   b. Outside air temperature.
   c. Room temperature.
   d. Filter differential pressure
   e. Zone carbon dioxide PPM
   f. Current mode (heating/cooling/fan).
   g. Supply air temperature attained last time unit was in heating.
   h. Supply air temperature attained last time unit was in cooling.
   i. Current command status of fan, compressor and gas valve.
   j. Run time meters on fan, compressor, and heat
   k. Zone setpoint adjust
   l. Mixed air dampers
   m. Zone override
   n. Reversing Valve
   o. High/Low Zone Temp
   p. Heating/Cooling Setpoint

EXHAUST FAN (EF-4)

2

1. The exhaust fan will operate during normal building operating hours.
2. Monitoring – The following conditions shall be monitored:
   a. Status of exhaust fan.
3. Alarm – If the exhaust fan runs while commanded to the off state or is the exhaust fan fails to run while commanded to the on state, an alarm shall be displayed and annunciated at the operator's console.

SEQUENCE OF OPERATIONS

Syserco Integrated Building Systems
Main Office:
44244 Fremont Blvd.
Fremont, CA 94538
510 498-1171
North Bay Office:
1425 N. McDowell Blvd
Suite 115
Petaluma, CA 94954
707 664-8443
www.syserco.com
Cont. License # 483939

SYSERCO ENGINEER: AP

ENG. CHK | SALES CHK

DATE: 10/21/09

ENGINEER
RUMSEY ENGINEERS
99 LINDEN STREET
OAKLAND, CA 94607
510.663.2070
510.663.2080 FAX

CONTRACTOR
OVERAA CONSTRUCTION
200 PARR BLVD
RICHMOND, CA 94801
510.234.0926
510.237.2435 FAX

△	DATE	DESCRIPTION	BY
	10/21/09	SUBMITTALS	AP
1	04/28/10	REVISIONS #2	AP

PROJECT: CALIFORNIA SHAKESPEARE– PHASE 1
100 GATEWAY BLVD, ORINDA CA 94563

ALERTON® AUTHORIZED DEALER
BACtalk

FILE

JOB NUMBER: C0B021

SHEET I.D.: CC 0.05A

BCM–ETH 201 Configuration Settings

Device Settings

Device Instance:	201	Description:	
Model Type:	BCM–ETH	Location:	

Ethernet Settings:

BACnet/Ethernet	Y	Ethernet Net #:	10	Ethernet MAC:	

MS/TP Settings

Net #:	2011	MAC:	127	Speed:	76.8Kbps	Support v1.02 VLCs:	N

TUX Settings

Base Device Instance:		TUX Vnet Number:		Kbps:	9600

PTP Settings

Vnet#:		Password:		Dial–in Enabled:	Y/N	Speaker:	Y/N	Country Code:	

IP Settings

IP Enabled:	N	IP Address:	
† Frame Type:	DIX *	UDP Port:	47808 *
† Reassembly Timeout:	120 *	Gateway 1 Address:	
† MAX MTU:	1500 *	Gateway 2 Address:	0 . 0 . 0 . 0 *
† Time to Live:	64 *	BDT Server IP Addr:	
† Type of Service:	0 *	BDT Server UDP Port:	47808 *
Virtual Net #:	7777	* = Factory Default Settings	
Subnet Mask:		† = Recommended DO NOT CHANGE Default Settings	

BDT Table Settings

	IP Address	UDP Port	†Subnet Mask		IP Address	UDP Port	†Subnet Mask
1		47808 *	255.255.255.255 *	17		47808 *	255.255.255.255 *
2		47808 *	255.255.255.255 *	18		47808 *	255.255.255.255 *
3		47808 *	255.255.255.255 *	19		47808 *	255.255.255.255 *
4		47808 *	255.255.255.255 *	20		47808 *	255.255.255.255 *
5		47808 *	255.255.255.255 *	21		47808 *	255.255.255.255 *
6		47808 *	255.255.255.255 *	22		47808 *	255.255.255.255 *
7		47808 *	255.255.255.255 *	23		47808 *	255.255.255.255 *
8		47808 *	255.255.255.255 *	24		47808 *	255.255.255.255 *
9		47808 *	255.255.255.255 *	25		47808 *	255.255.255.255 *
10		47808 *	255.255.255.255 *	26		47808 *	255.255.255.255 *
11		47808 *	255.255.255.255 *	27		47808 *	255.255.255.255 *
12		47808 *	255.255.255.255 *	28		47808 *	255.255.255.255 *
13		47808 *	255.255.255.255 *	29		47808 *	255.255.255.255 *
14		47808 *	255.255.255.255 *	30		47808 *	255.255.255.255 *
15		47808 *	255.255.255.255 *	31		47808 *	255.255.255.255 *
16		47808 *	255.255.255.255 *	32		47808 *	255.255.255.255 *

* = Factory Default Settings / †DO NOT CHANGE Subnet Mask of 255.255.255.255, must be left at Default Settings for proper operation

BCM–ETH # 201 CONFIGURATION SETTINGS

Syserco
Integrated Building Systems
Main Office:
44244 Fremont Blvd.
Fremont, CA 94538
510 498-1171
North Bay Office:
1425 N. McDowell Blvd
Suite 115
Petaluma, CA 94954
707 664-8443
www.syserco.com
Cont. License # 483939

SYSERCO ENGINEER: AP
ENG. CHK | SALES CHK
DATE: 10/21/09

ENGINEER
RUMSEY ENGINEERS
99 LINDEN STREET
OAKLAND, CA 94607
510.663.2070
510.663.2080 FAX

CONTRACTOR
OVERAA CONSTRUCTION
200 PARR BLVD
RICHMOND, CA 94801
510.234.0926
510.237.2435 FAX

△	DATE	DESCRIPTION	BY
	10/21/09	SUBMITTALS	AP
△	04/28/10	REVISIONS #2	AP

PROJECT
CALIFORNIA SHAKESPEARE– PHASE 1
100 GATEWAY BLVD, ORINDA CA 94563

ALERTON® AUTHORIZED DEALER
BACtalk

FILE
JOB NUMBER: COB021
SHEET I.D.: CC 0.06

Affix Permanent warning labels to equipment that can be automatically started by the control system.

1. Labels shall use white lettering (12-point type or larger) on a red background
2. Warning labels shall read as follows

TAG	QTY	PART NUMBER	DESCRIPTION	COMMENTS
			PANEL DEVICES	
VLC	2	VLC-651R	ALERTON DDC CONTROLLER	
ENC	2	A16R124	NEMA-3R 16X12X4 ENCLOSURE	
TB	4	16527500	ABB ENTRELEC M4/6 TERMINAL BLOCK	24G (GREEN/YELLOW)
	4	11511607	ABB ENTRELEC M4/6 TERMINAL BLOCK	STANDARD (GREY)
	2	11836816	ABB ENTRELEC FEM6 END SECTION	
	4	10300226	ABB ENTRELEC BAM END STOP	
			FIELD DEVICES	
TS-2	2	MS-2000	ALERTON MICROSET II ROOM CONTROLLER	
TS-1	2	TS-2006-FB-10-AA	ALERTON 6" DUCT TEMPERATURE SENSOR	
H600	2	H-600	VERIS CURRENT SWITCH	
CWE	2	VERIS-CWE	CO2 WALL SENSOR	
CWL	2	VERIS-CWLS-X-T-D	CO2 WALL SENSOR WITH TEMPERATURE	
DPT	2	DWYER-MS-111	DIFFERENTIAL PRESSURE TRANSDUCER	PANEL MOUNTED
DA-NF	2	LMB24-SR	DAMPER ACTUATOR	

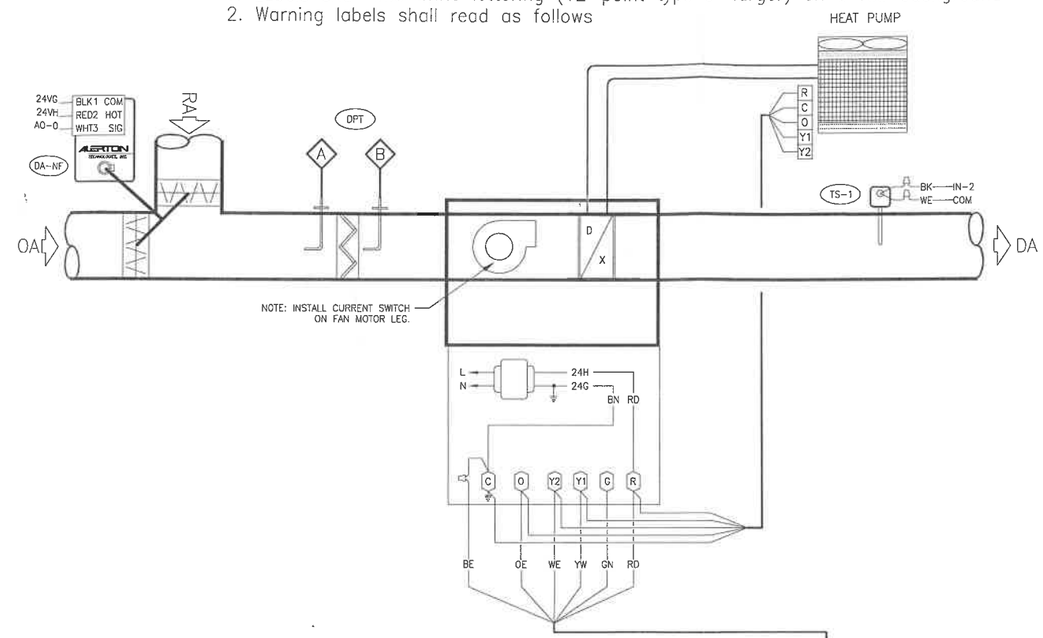

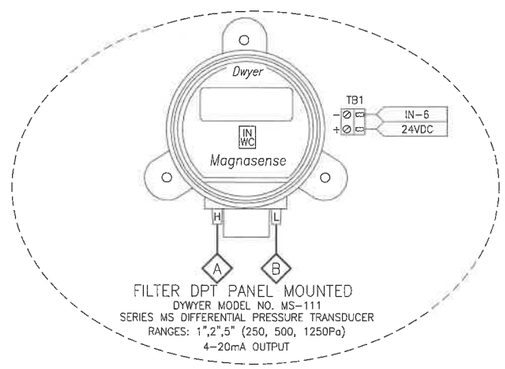

FILTER DPT PANEL MOUNTED
DYWYER MODEL NO. MS-111
SERIES MS DIFFERENTIAL PRESSURE TRANSDUCER
RANGES: 1",2",5" (250, 500, 1250Pa)
4-20mA OUTPUT

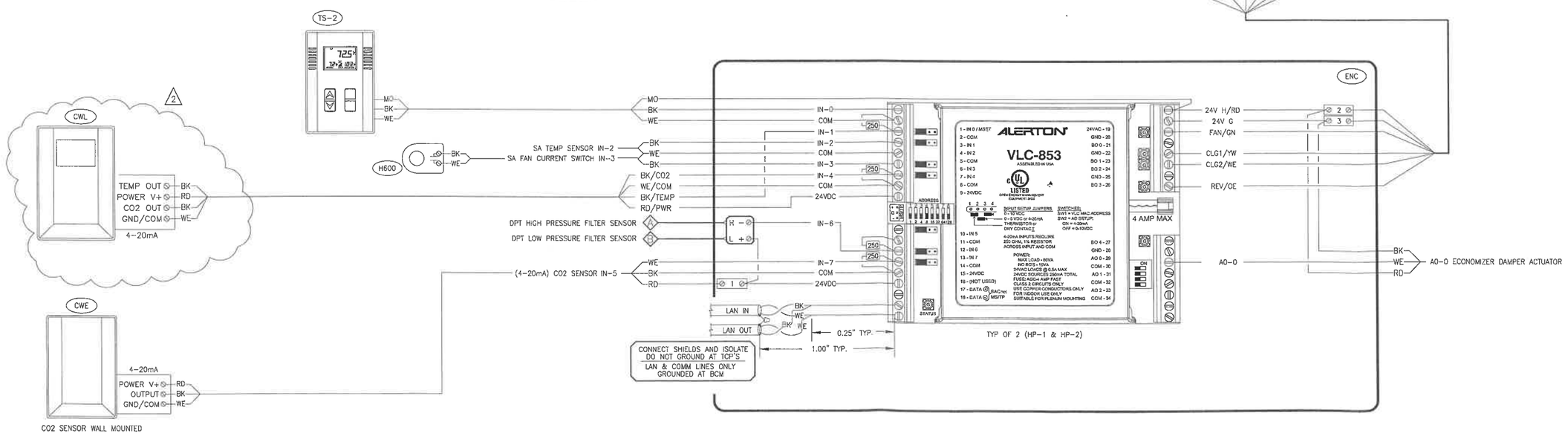

TYPICAL HEAT PUMP CONTROL DIAGRAM

Syserco
Integrated Building Systems
Main Office:
44244 Fremont Blvd.
Fremont, CA 94538
510 498-1171
North Bay Office:
1425 N. McDowell Blvd
Suite 115
Petaluma, CA 94954
707 664-8443
www.syserco.com
Cont. License # 483939

SYSERCO ENGINEER: AP
ENG. CHK | SALES CHK
DATE: 10/21/09

ENGINEER
RUMSEY ENGINEERS
99 LINDEN STREET
OAKLAND, CA 94607
510.663.2070
510.663.2080 FAX
CONTRACTOR
OVERAA CONSTRUCTION
200 PARR BLVD
RICHMOND, CA 94801
510.234.0926
510.237.2435 FAX

DATE	DESCRIPTION	BY
10/21/09	SUBMITTALS	AP
04/28/10	REVISIONS #2	AP

PROJECT: CALIFORNIA SHAKESPEARE- PHASE 1
100 GATEWAY BLVD, ORINDA CA 94563

BACtalk
ALERTON® AUTHORIZED DEALER

FILE
JOB NUMBER: COB021
SHEET I.D.: CC 1.01A

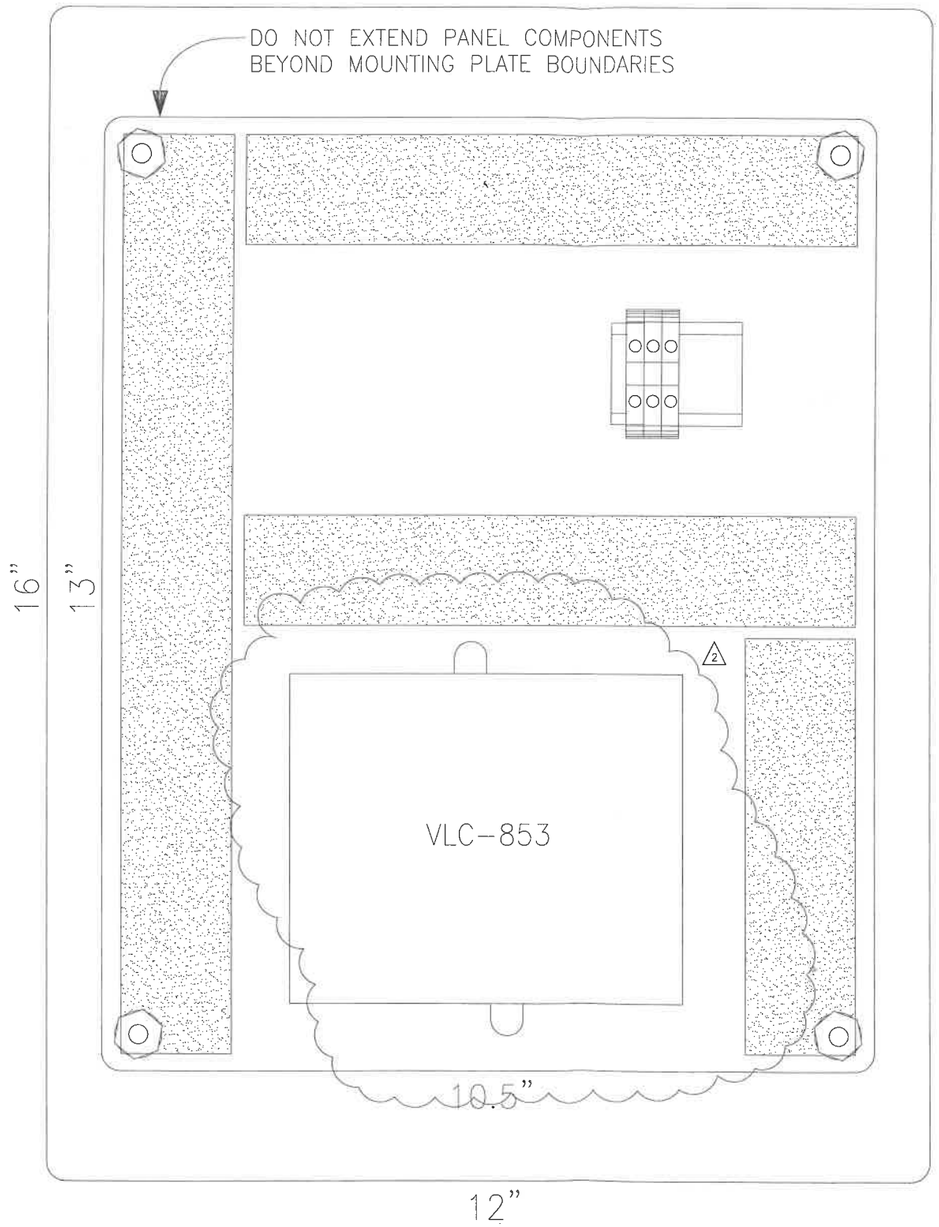

TYPICAL HEAT PUMP PANEL LAYOUT

Syserco
Integrated Building Systems
Main Office:
44244 Fremont Blvd.
Fremont, CA 94538
510 498-1171
North Bay Office:
1425 N. McDowell Blvd
Suite 115
Petaluma, CA 94954
707 664-8443
www.syserco.com
Cont. License # 483939

SYSERCO ENGINEER
AP

ENG. CHK | *SALES CHK*

DATE
10/21/09

ENGINEER
RUMSEY ENGINEERS
99 LINDEN STREET
OAKLAND, CA 94607
510.663.2070
510.663.2080 FAX

CONTRACTOR
OVERAA CONSTRUCTION
200 PARR BLVD
RICHMOND, CA 94801
510.234.0926
510.237.2435 FAX

	DATE	DESCRIPTION	BY
1	10/21/09	SUBMITTALS	AP
2	04/28/10	REVISIONS #2	AP

PROJECT
CALIFORNIA SHAKESPEARE- PHASE 1
100 GATEWAY BLVD, ORINDA CA 94563

ALERTON® AUTHORIZED DEALER
BACtalk

FILE

JOB NUMBER
COB021

SHEET I.D.
CC 1.01P

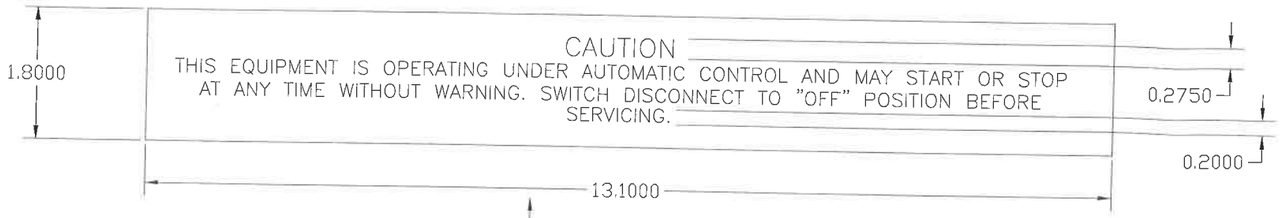

PANEL DEVICES				
TAG	QTY	PART NUMBER	DESCRIPTION	COMMENTS
VLC	1	VLC-550	ALERTON VISUAL LOGIC CONTROLLER	
ENC	1	A16R124	HOFFMAN NEMA-3R 16X12X4 ENCLOSURE	
TR-1	1	PSH100AWB10	FUNCTIONAL DEVICES POWER SUPPLY	W/10 AMP SWITCH/BREAKER, INTERNAL WIRES
FIELD DEVICES				
V120	1	V-120	VERIS SPDT ENCLOSED RELAY	
H608	1	H-608	VERIS CURRENT SWITCH	

Affix Permanent warning labels to equipment that can be automatically started by the control system.

1. Labels shall use white lettering (12-point type or larger) on a red background
2. Warning labels shall read as follows

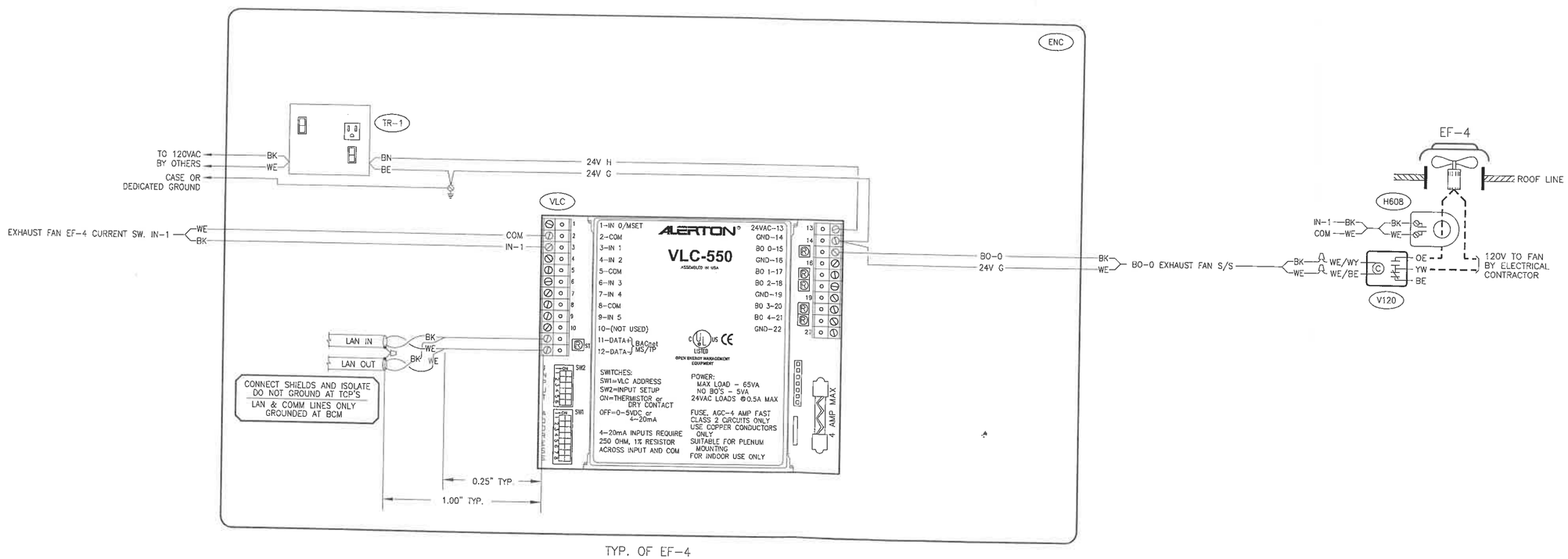

TYP. OF EF-4

EF-4 UNIT CONTROL DIAGRAM

Syserco Integrated Building Systems

Main Office:
44244 Fremont Blvd.
Fremont, CA 94538
510 498-1171

North Bay Office:
1425 N. McDowell Blvd
Suite 115
Petaluma, CA 94954
707 664-8443
www.syserco.com
Cont. License # 483939

SYSERCO ENGINEER
AP

ENG. CHK | *SALES CHK*

DATE
10/21/09

ENGINEER
RUMSEY ENGINEERS
99 LINDEN STREET
OAKLAND, CA 94607
510.663.2070
510.663.2080 FAX

CONTRACTOR
OVERAA CONSTRUCTION
200 PARR BLVD
RICHMOND, CA 94801
510.234.0926
510.237.2435 FAX

△	DATE	DESCRIPTION	BY
	10/21/09	SUBMITTALS	AP
△	04/28/10	REVISIONS #2	AP

PROJECT
CALIFORNIA SHAKESPEARE - PHASE 1
100 GATEWAY BLVD, ORINDA CA 94563

ALERTON® AUTHORIZED DEALER
BACtalk

FILE

JOB NUMBER
COB021

SHEET I.D.
CC 1.02A

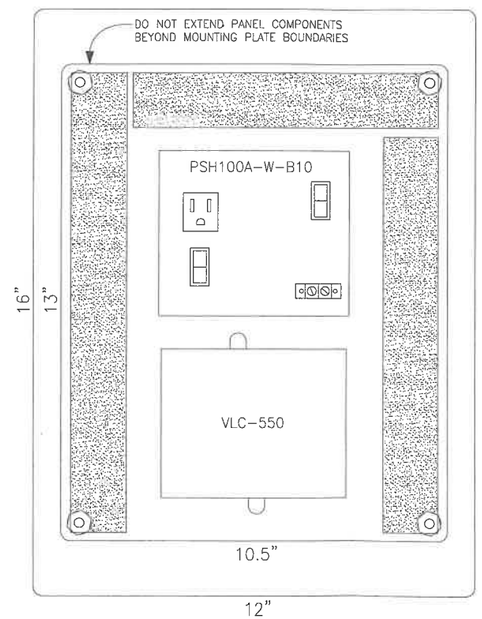

EF-4 UNIT PANEL LAYOUT DIAGRAM

Syserco
Integrated Building Systems
Main Office:
44244 Fremont Blvd.
Fremont, CA 94538
510 498-1171
North Bay Office:
1425 N. McDowell Blvd
Suite 115
Petaluma, CA 94954
707 664-8443
www.syserco.com
Cont. License # 483939

SYSERCO ENGINEER
AP

ENG. CHK | *SALES CHK*

DATE
10/21/09

ENGINEER
RUMSEY
ENGINEERS
99 LINDEN STREET
OAKLAND, CA 94607
510.663.2070
510.663.2080 FAX

CONTRACTOR
OVERAA
CONSTRUCTION
200 PARR BLVD
RICHMOND, CA 94801
510.234.0926
510.237.2435 FAX

△	DATE	DESCRIPTION	BY
	10/21/09	SUBMITTALS	AP
△1	04/28/10	REVISIONS #2	AP

PROJECT
CALIFORNIA SHAKESPEARE- PHASE 1
100 GATEWAY BLVD, ORINDA CA 94563

ALERTON®
AUTHORIZED DEALER
BACtalk

FILE

JOB NUMBER
C0B021

SHEET I.D.
CC 1.02P

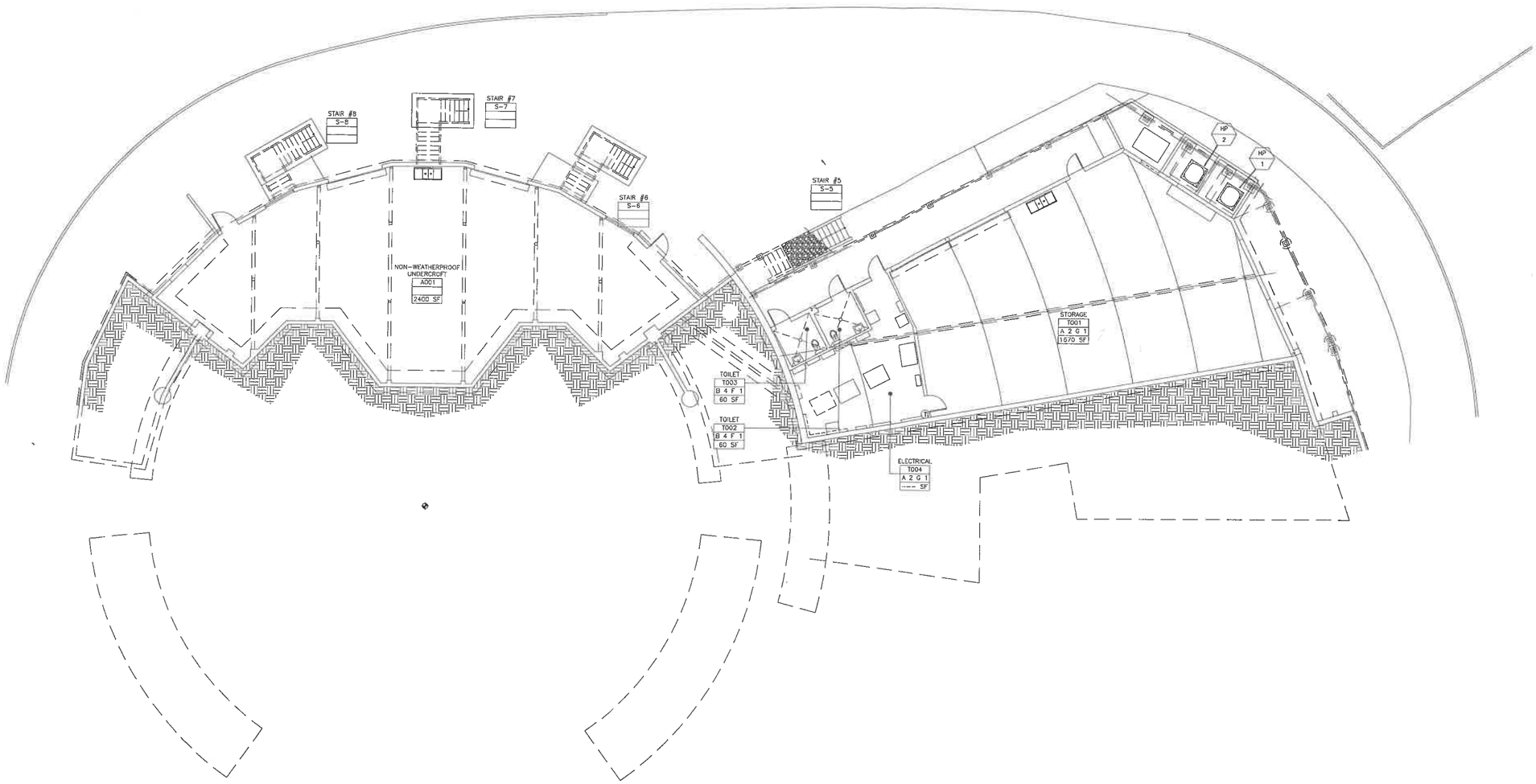

HEAT PUMP 1 & 2 FLOOR PLAN

Syserco
Integrated Building Systems

Main Office:
44244 Fremont Blvd.
Fremont, CA 94538
510 498-1171

North Bay Office:
1425 N. McDowell Blvd
Suite 115
Petaluma, CA 94954
707 664-8443
www.syserco.com
Cont. License # 483939

SYSERCO ENGINEER
AP

ENG. CHK | SALES CHK

DATE
10/21/09

ENGINEER
RUMSEY ENGINEERS
99 LINDEN STREET
OAKLAND, CA 94607
510.663.2070
510.663.2080 FAX

CONTRACTOR
OVERAA CONSTRUCTION
200 PARR BLVD
RICHMOND, CA 94801
510.234.0926
510.237.2435 FAX

△	DATE	DESCRIPTION	BY
	10/21/09	SUBMITTALS	AP
2	04/28/10	REVISIONS #2	AP

PROJECT
CALIFORNIA SHAKESPEARE- PHASE 1
100 GATEWAY BLVD, ORINDA CA 94563

ALERTON® AUTHORIZED DEALER
BACtalk

FILE

JOB NUMBER
C0B021

SHEET I.D.
CC 2.01

SEQUENCE OF OPERATION

BACtalk System Description

HEAT PUMP WITH ECONOMIZER

1. Each unit will be directly controlled by its own dedicated unitary controller. The DDC system will interface with units to provide the control.
2. Each unitary controller will be connected to a wall mounted electronic temperature sensor with LED or LCD display, push buttons for warmer, cooler, OSA temperature, room temperature, room set point, and after-hours override timer.
3. Heating operation: The controller compares the heating setpoint with the space temperature and determines a heating control signal to engage the reversing valve and compressor. ~~Further call for heat shall engage the electric strip heat element to maintain room setpoint.~~
4. Cooling operation: The controller compares the cooling setpoint with the space temperature and determines a cooling signal. The first stage of cooling will enable the economizer to provide free cooling for as long as possible. The second stage will stage the compressor to maintain the room set point.
5. Fan Operation: During the occupied mode, the DDC system sends an occupied signal to the integrated unit controller and the fan runs. During unoccupied mode, the fan cycles with demand. A timer keeps the fan on for 1 minute after the demand is satisfied to dissipate any energy in the coil. The temperature is controlled by the night cooling and heating setpoints. ~~Interlock exhaust fans as shown on schedule.~~ 1
6. Minimum Outside Air Ventilation: When in the occupied mode, the controller shall measure the zone CO2 levels and open the outside air dampers on rising CO2 concentrations, overriding normal damper operation as CO2 concentrations rise from 750ppm to 850ppm (adj.) and above.
7. Filter Differential Pressure Monitor: The controller shall monitor the differential pressure across the filter. When filter differential pressure exceeds a user definable limit (adj.) and alarm will trigger.
8. Monitoring – ~~The following conditions shall be monitored:~~
   a. Supply air temperature.
   b. Outside air temperature.
   c. Room temperature. 1
   d. Filter Differential Pressure
   e. Zone Carbon Dioxide PPM
   f. ~~Current mode (heating/cooling/~~fan).
   g. Supply air temperature attained last time unit was in heating.
   h. Supply air temperature attained last time unit was in cooling.
   i. Current command status of fan, compressor and gas valve.
   j. Run time meters on fan, compressor, and heat

HEATING SETPOINT
COOLING SETPOINT — CAN BE ONE POINT/DISPLAY

EXHAUST FAN

1. The exhaust fan will operate during normal building operating hours.
2. Monitoring – The following conditions shall be monitored:
   a. Status of exhaust fan.
3. Alarm – If the exhaust fan runs while commanded to the off state or is the exhaust fan fails to run while commanded to the on state, an alarm shall be displayed and annunciated at the operator's console.

* PROVIDE FOR MOST DEMANDING ZONE FOR UNITS WITH TWO T'STATS

REVISE HEATING SEQUENCE TO ALLOW FOR 2-STAGE HEATING. ALSO, THERE IS NO STRIP HEAT ELEMENT FOR THESE FANCOILS.

PROVIDE 2-STAGE COOLING (DX) SEQUENCE TO FOLLOW ECONOMIZER OPERATION. INDICATE THAT ECONOMIZER SHALL MODULATE TO MAINTAIN SPACE TEMP (INTEGRATED).

WHEN CO_2 LEVEL IS MEASURED AS LESS THAN 900 PPM, OA DAMPERS SHALL PROVIDE MINIMUM CFM (1), WHEN CO_2 EXCEEDS 900 PPM, OA DAMPERS SHALL PROVIDE CODE REQ'D CFM (2). WHEN ECONOMIZER COOLING IS REQ'D, OA DAMPERS SHALL MODULATE TO PROVIDE SPACE TEMPERATURE.

	(1) CO_2 < 900 PPM	(2) CO_2 ≥ 900 PPM	(3) ECONOMIZER
HP-1	100	550	550-MAX
HP-2	280	370	370-MAX

REFER TO 15900 PAGE 33 FOR POINTS LIST & WHICH POINTS ARE TO BE TRENDED & SHOWN ON GUI

INDICATE WHICH FAN(S), NOTE THAT MANY EXHAUST FANS ON THIS PROJECT ARE NOT ON BMS/DDC CONTROLS

Syserco Integrated Building Systems
Main Office:
44244 Fremont Blvd.
Fremont, CA 94538
510 498-1171
North Bay Office:
1425 N. McDowell Blvd
Suite 115
Petaluma, CA 94954
707 664-8443
www.syserco.com
Cont. License # 483939

SYSERCO ENGINEER: AP
ENG. CHK | SALES CHK
DATE: 10/21/09

ENGINEER
RUMSEY ENGINEERS
99 LINDEN STREET
OAKLAND, CA 94607
510.663.2070
510.663.2080 FAX

CONTRACTOR
OVERAA CONSTRUCTION
200 PARR BLVD
RICHMOND, CA 94801
510.234.0926
510.237.2435 FAX

DATE	DESCRIPTION	BY
10/21/09	SUBMITTALS	AP
03/09/10	REVISION 1	AP

PROJECT: CALIFORNIA SHAKESPEARE- PHASE 1
100 GATEWAY BLVD, ORINDA CA 94563

BACtalk
ALERTON® AUTHORIZED DEALER

FILE
JOB NUMBER: COB021
SHEET I.D.: CC 0.05A

BCM–ETH 201 Configuration Settings

Device Settings

Device Instance:	201	Description:	
Model Type:	BCM–ETH	Location:	

Ethernet Settings:

BACnet/Ethernet	Y	Ethernet Net #:	10	Ethernet MAC:	

MS/TP Settings

Net #:	2011	MAC:	127	Speed:	76.8Kbps	Support v1.02 VLCs:	N

TUX Settings

Base Device Instance:		TUX Vnet Number:		Kbps:	9600

PTP Settings

Vnet#:		Password:		Dial–in Enabled:	Y/N	Speaker: Y/N	Country Code:

IP Settings

IP Enabled:	N	IP Address:	
† Frame Type:	DIX *	UDP Port:	47808 *
† Reassembly Timeout:	120 *	Gateway 1 Address:	
† MAX MTU:	1500 *	Gateway 2 Address:	0 . 0 . 0 . 0 *
† Time to Live:	64 *	BDT Server IP Addr:	
† Type of Service:	0 *	BDT Server UDP Port:	47808 *
Virtual Net #:	7777	* = Factory Default Settings	
Subnet Mask:		† = Recommended DO NOT CHANGE Default Settings	

BDT Table Settings

	IP Address	UDP Port	†Subnet Mask		IP Address	UDP Port	†Subnet Mask
1		47808 *	255.255.255.255 *	17		47808 *	255.255.255.255 *
2		47808 *	255.255.255.255 *	18		47808 *	255.255.255.255 *
3		47808 *	255.255.255.255 *	19		47808 *	255.255.255.255 *
4		47808 *	255.255.255.255 *	20		47808 *	255.255.255.255 *
5		47808 *	255.255.255.255 *	21		47808 *	255.255.255.255 *
6		47808 *	255.255.255.255 *	22		47808 *	255.255.255.255 *
7		47808 *	255.255.255.255 *	23		47808 *	255.255.255.255 *
8		47808 *	255.255.255.255 *	24		47808 *	255.255.255.255 *
9		47808 *	255.255.255.255 *	25		47808 *	255.255.255.255 *
10		47808 *	255.255.255.255 *	26		47808 *	255.255.255.255 *
11		47808 *	255.255.255.255 *	27		47808 *	255.255.255.255 *
12		47808 *	255.255.255.255 *	28		47808 *	255.255.255.255 *
13		47808 *	255.255.255.255 *	29		47808 *	255.255.255.255 *
14		47808 *	255.255.255.255 *	30		47808 *	255.255.255.255 *
15		47808 *	255.255.255.255 *	31		47808 *	255.255.255.255 *
16		47808 *	255.255.255.255 *	32		47808 *	255.255.255.255 *

* = Factory Default Settings / †DO NOT CHANGE Subnet Mask of 255.255.255.255, must be left at Default Settings for proper operation

BCM–ETH # 201 CONFIGURATION SETTINGS

Syserco Integrated Building Systems

Main Office:
44244 Fremont Blvd.
Fremont, CA 94538
510 498-1171

North Bay Office:
1425 N. McDowell Blvd
Suite 115
Petaluma, CA 94954
707 664-8443
www.syserco.com
Cont. License # 483939

SYSERCO ENGINEER
AP

ENG. CHK | SALES CHK

DATE
10/21/09

ENGINEER
RUMSEY ENGINEERS
99 LINDEN STREET
OAKLAND, CA 94607
510.663.2070
510.663.2080 FAX

CONTRACTOR
OVERAA CONSTRUCTION
200 PARR BLVD
RICHMOND, CA 94801
510.234.0926
510.237.2435 FAX

△	DATE	DESCRIPTION	BY
	10/21/09	SUBMITTALS	AP
△	03/09/10	REVISION 1	AP

PROJECT
CALIFORNIA SHAKESPEARE– PHASE 1
100 GATEWAY BLVD, ORINDA CA 94563

ALERTON® AUTHORIZED DEALER
BACtalk

FILE

JOB NUMBER
C0B021

SHEET I.D.
CC 0.06

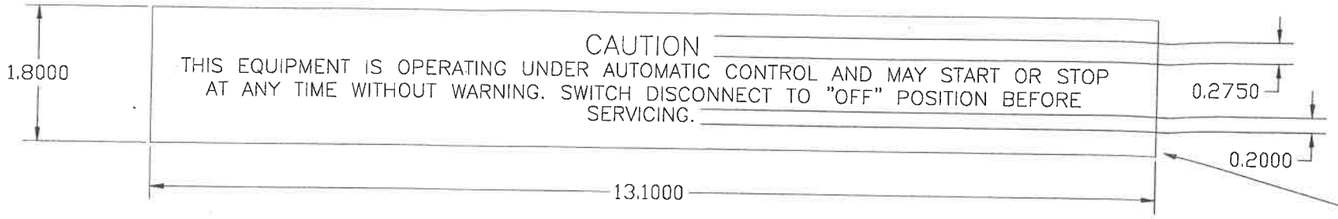

Affix Permanent warning labels to equipment that can be automatically started by the control system.

1. Labels shall use white lettering (12-point type or larger) on a red background
2. Warning labels shall read as follows

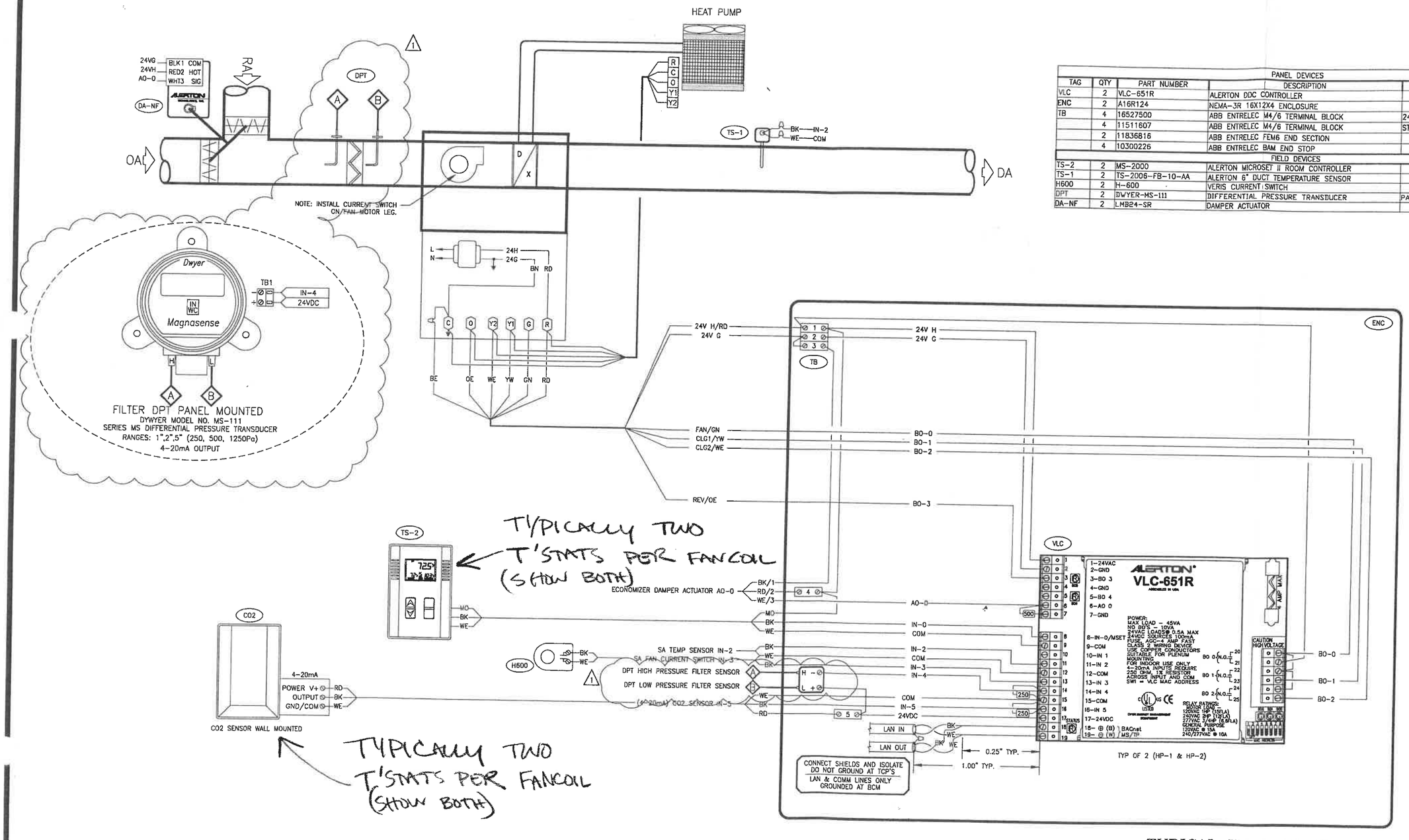

PANEL DEVICES				
TAG	QTY	PART NUMBER	DESCRIPTION	COMMENTS
VLC	2	VLC-651R	ALERTON DDC CONTROLLER	
ENC	2	A16R124	NEMA-3R 16X12X4 ENCLOSURE	
TB	4	16527500	ABB ENTRELEC M4/6 TERMINAL BLOCK	24G (GREEN/YELLOW)
	4	11511607	ABB ENTRELEC M4/6 TERMINAL BLOCK	STANDARD (GREY)
	2	11836816	ABB ENTRELEC FEM6 END SECTION	
	4	10300226	ABB ENTRELEC BAM END STOP	
FIELD DEVICES				
TS-2	2	MS-2000	ALERTON MICROSET II ROOM CONTROLLER	
TS-1	2	TS-2006-FB-10-AA	ALERTON 6" DUCT TEMPERATURE SENSOR	
H600	2	H-600	VERIS CURRENT SWITCH	
DPT	2	DWYER-MS-111	DIFFERENTIAL PRESSURE TRANSDUCER	PANEL MOUNTED
DA-NF	2	LMB24-SR	DAMPER ACTUATOR	

TYPICAL HEAT PUMP CONTROL DIAGRAM

Syserco
Integrated Building Systems
Main Office:
44244 Fremont Blvd.
Fremont, CA 94538
510 498-1171
North Bay Office:
1425 N. McDowell Blvd
Suite 115
Petaluma, CA 94954
707 664-8443
www.syserco.com
Cont. License # 483939

SYSERCO ENGINEER: AP

ENG. CHK | SALES CHK

DATE: 10/21/09

ENGINEER
RUMSEY ENGINEERS
99 LINDEN STREET
OAKLAND, CA 94607
510.663.2070
510.663.2080 FAX

CONTRACTOR
OVERAA CONSTRUCTION
200 PARR BLVD
RICHMOND, CA 94801
510.234.0926
510.237.2435 FAX

BY	DATE	DESCRIPTION
NP	10/21/09	SUBMITTALS
NP	03/08/10	REVISION 1

PROJECT: CALIFORNIA SHAKESPEARE- PHASE 1
100 GATEWAY BLVD, ORINDA CA 94563

ALERTON AUTHORIZED DEALER
BACtalk

FILE

JOB NUMBER: COB021

SHEET I.D.: CC 1.01A

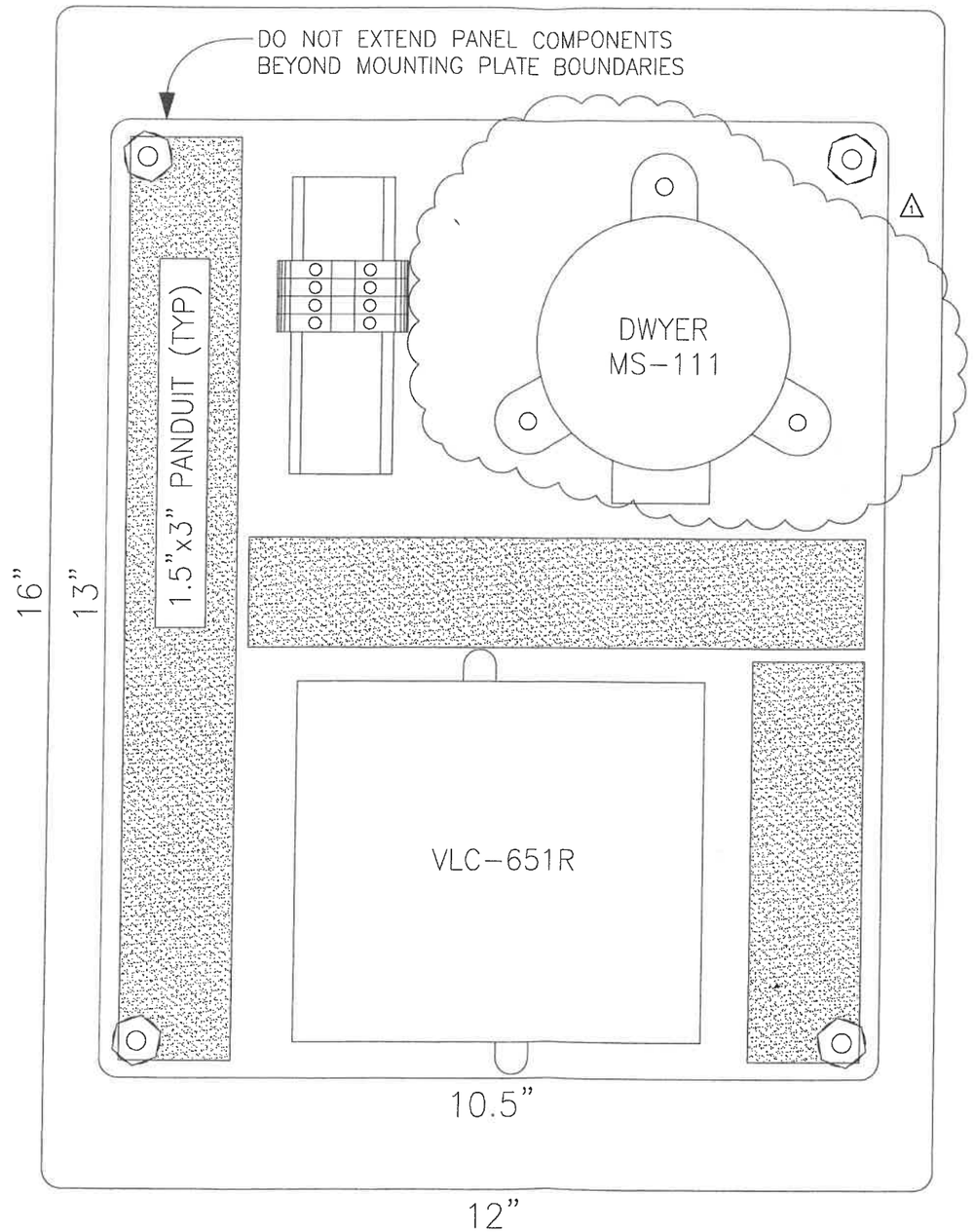

TYPICAL HEAT PUMP PANEL LAYOUT

Syserco
Integrated Building Systems
Main Office:
44244 Fremont Blvd.
Fremont, CA 94538
510 498-1171
North Bay Office:
1425 N. McDowell Blvd
Suite 115
Petaluma, CA 94954
707 664-8443
www.syserco.com
Cont. License # 483939

SYSERCO ENGINEER
AP

ENG. CHK | SALES CHK

DATE
10/21/09

ENGINEER
RUMSEY ENGINEERS
99 LINDEN STREET
OAKLAND, CA 94607
510.663.2070
510.663.2080 FAX

CONTRACTOR
OVERAA CONSTRUCTION
200 PARR BLVD
RICHMOND, CA 94801
510.234.0926
510.237.2435 FAX

△	DATE	DESCRIPTION	BY
	10/21/09	SUBMITTALS	AP
△1	03/09/10	REVISION 1	AP

PROJECT
CALIFORNIA SHAKESPEARE- PHASE 1
100 GATEWAY BLVD, ORINDA CA 94563

BACtalk
ALERTON®
AUTHORIZED DEALER

FILE

JOB NUMBER
C0B021

SHEET I.D.
CC 1.01P

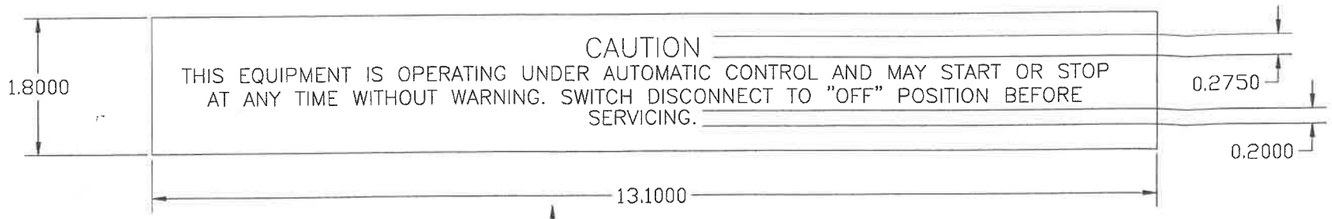

PANEL DEVICES				
TAG	QTY	PART NUMBER	DESCRIPTION	COMMENTS
VLC	1	VLC-550	ALERTON VISUAL LOGIC CONTROLLER	
ENC	1	A16R124	HOFFMAN NEMA-3R 16X12X4 ENCLOSURE	
TR-1	1	PSH100AWB10	FUNCTIONAL DEVICES POWER SUPPLY	W/10 AMP SWITCH/BREAKER, INTERNAL WIRES
FIELD DEVICES				
V120	1	V-120	VERIS SPDT ENCLOSED RELAY	
H608	1	H-608	VERIS CURRENT SWITCH	

Affix Permanent warning labels to equipment that can be automatically started by the control system.

1. Labels shall use white lettering (12-point type or larger) on a red background
2. Warning labels shall read as follows

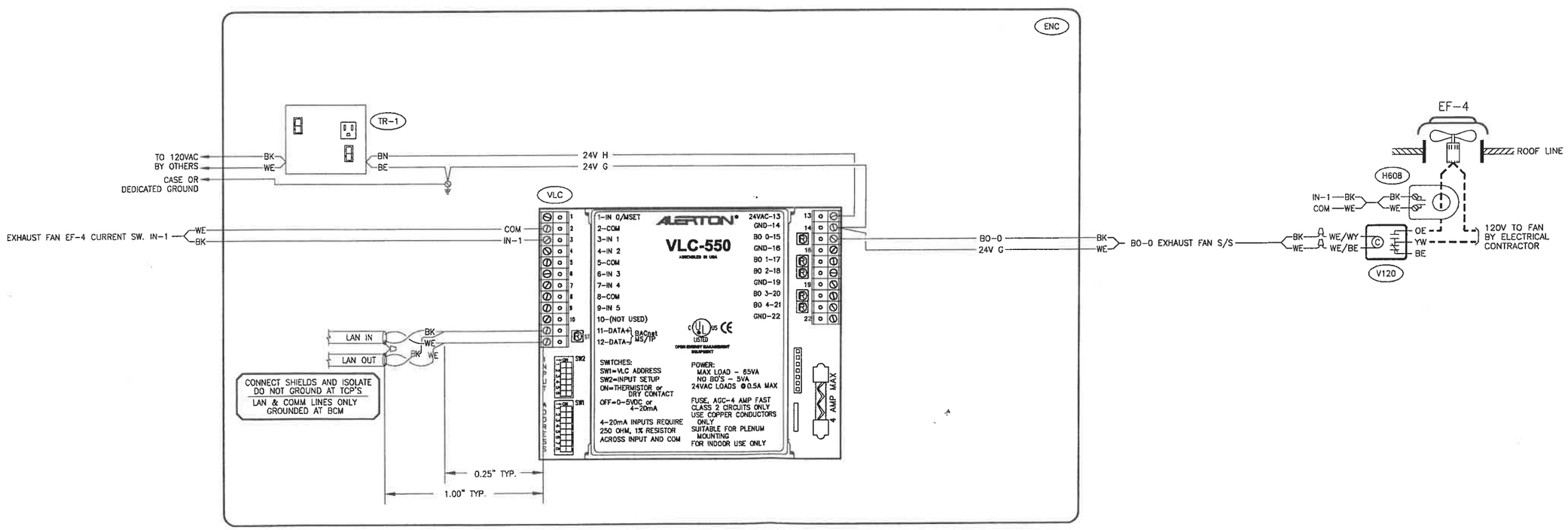

TYP. OF EF-4

EF-4 UNIT CONTROL DIAGRAM

Syserco Integrated Building Systems
Main Office:
44244 Fremont Blvd.
Fremont, CA 94538
510 498-1171
North Bay Office:
1425 N. McDowell Blvd
Suite 115
Petaluma, CA 94954
707 664-8443
www.syserco.com
Cont. License # 483939

SYSERCO ENGINEER
AP

ENG. CHK | SALES CHK

DATE
10/21/09

ENGINEER
RUMSEY ENGINEERS
99 LINDEN STREET
OAKLAND, CA 94607
510.663.2070
510.663.2080 FAX

CONTRACTOR
OVERAA CONSTRUCTION
200 PARR BLVD
RICHMOND, CA 94801
510.234.0926
510.237.2435 FAX

DATE	DESCRIPTION	BY
10/21/09	SUBMITTALS	AP
03/09/10	REVISION 1	AP

PROJECT
CALIFORNIA SHAKESPEARE- PHASE 1
100 GATEWAY BLVD, ORINDA CA 94563

BACtalk
ALERTON® AUTHORIZED DEALER

FILE

JOB NUMBER
C0B021

SHEET I.D.
CC 1.02A

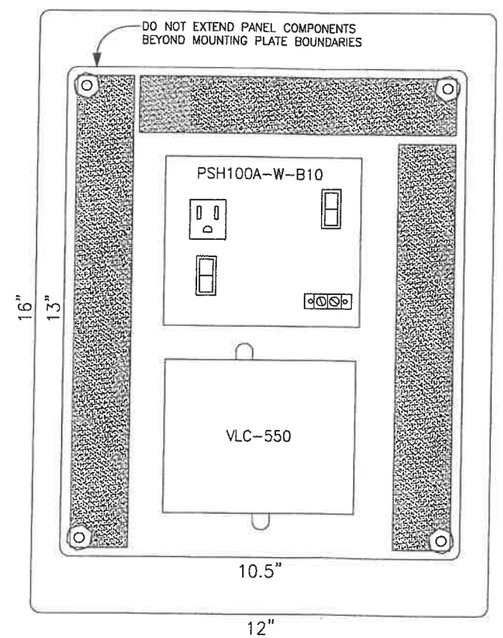

EF-4 UNIT PANEL LAYOUT DIAGRAM

Syserco
Integrated Building Systems
Main Office:
44244 Fremont Blvd.
Fremont, CA 94538
510 498-1171
North Bay Office:
1425 N. McDowell Blvd
Suite 115
Petaluma, CA 94954
707 664-8443
www.syserco.com
Cont. License # 483939

SYSERCO ENGINEER
AP

ENG. CHK | *SALES CHK*

DATE
10/21/09

ENGINEER
RUMSEY ENGINEERS
99 LINDEN STREET
OAKLAND, CA 94607
510.663.2070
510.663.2080 FAX

CONTRACTOR
OVERAA CONSTRUCTION
200 PARR BLVD
RICHMOND, CA 94801
510.234.0926
510.237.2435 FAX

BY	№	№

△	DATE	DESCRIPTION
	10/21/09	SUBMITTALS
1	03/09/10	REVISION 1

PROJECT
CALIFORNIA SHAKESPEARE- PHASE 1
100 GATEWAY BLVD, ORINDA CA 94563

ALERTON® AUTHORIZED DEALER
BACtalk

FILE

JOB NUMBER
C0B021

SHEET I.D.
CC 1.02P

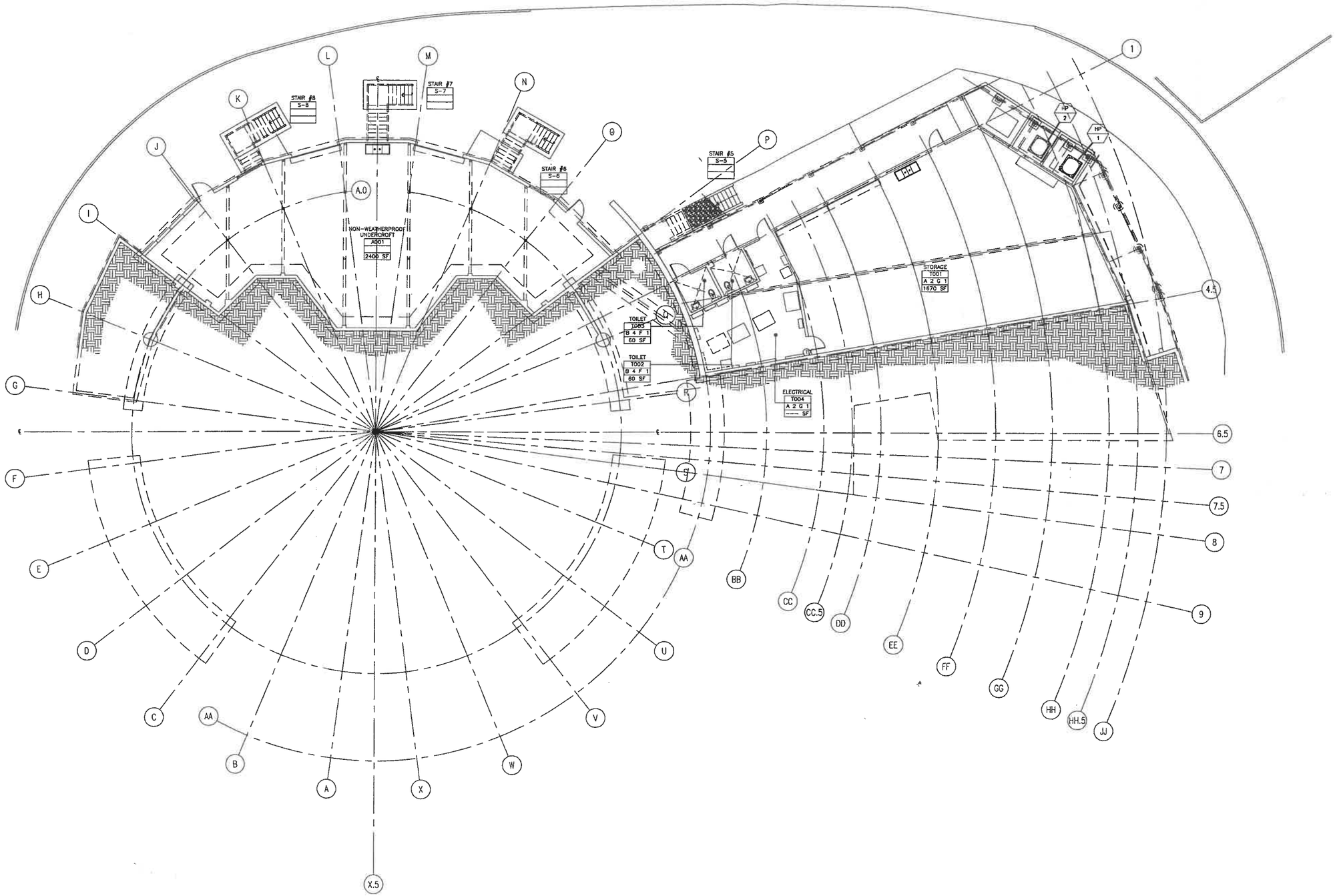

HEAT PUMP 1 & 2 FLOOR PLAN

Syserco
Integrated Building Systems
Main Office:
44244 Fremont Blvd.
Fremont, CA 94538
510 498-1171
North Bay Office:
1425 N. McDowell Blvd
Suite 115
Petaluma, CA 94954
707 664-8443
www.syserco.com
Cont. License # 483939

SYSERCO ENGINEER
AP

ENG. CHK | SALES CHK

DATE
10/21/09

ENGINEER
RUMSEY ENGINEERS
99 LINDEN STREET
OAKLAND, CA 94607
510.663.2070
510.663.2080 FAX

CONTRACTOR
OVERAA CONSTRUCTION
200 PARR BLVD
RICHMOND, CA 94801
510.234.0926
510.237.2435 FAX

DATE	DESCRIPTION	BY
10/21/09	SUBMITTALS	AP
03/09/10	REVISION 1	AP

PROJECT
CALIFORNIA SHAKESPEARE- PHASE 1
100 GATEWAY BLVD, ORINDA CA 94563

BACtalk
ALERTON® AUTHORIZED DEALER

FILE

JOB NUMBER
C0B021

SHEET I.D.
CC 2.01

First Floor

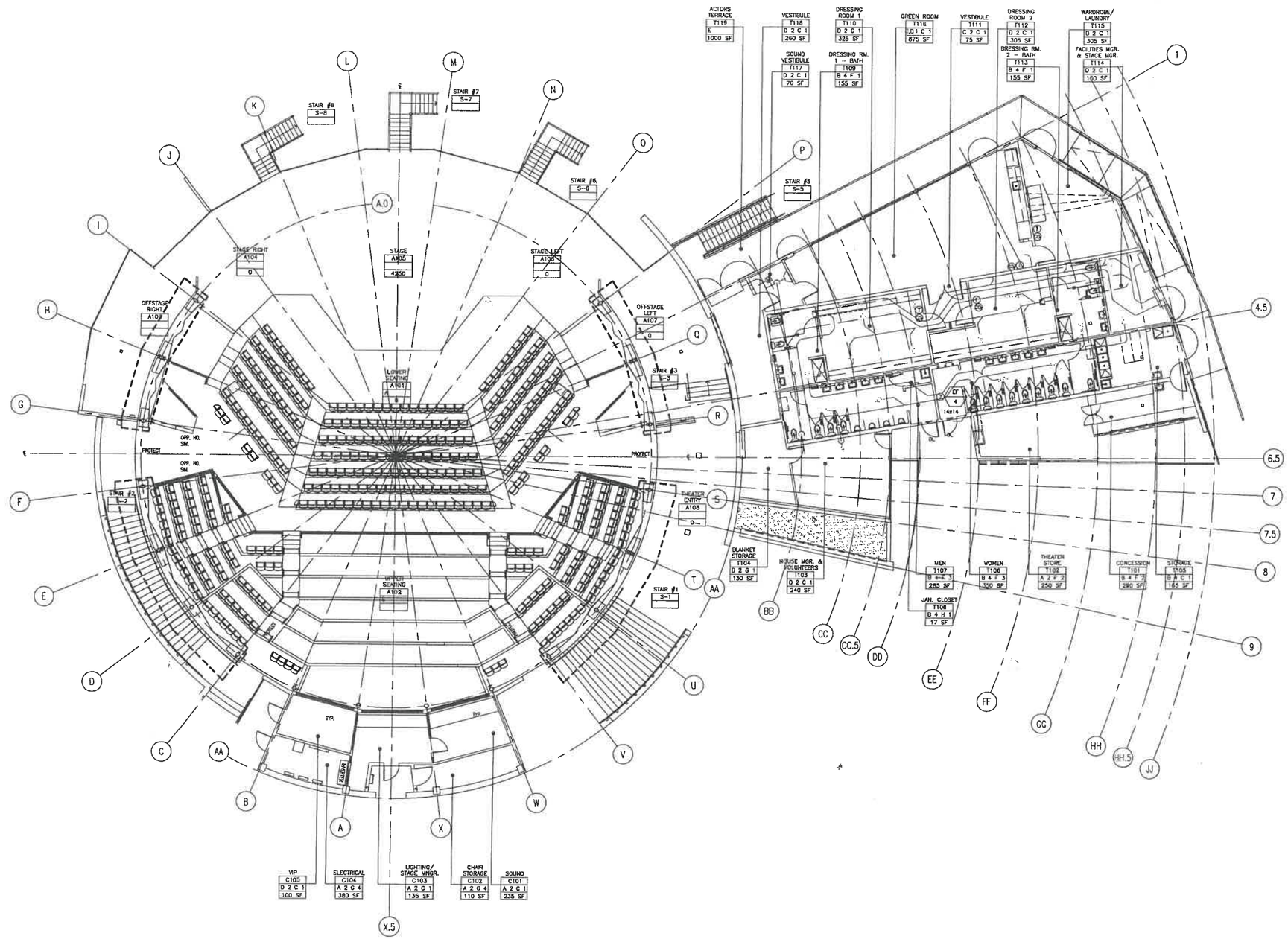

EF-4 FLOOR PLAN

Syserco
Integrated Building Systems
Main Office:
44244 Fremont Blvd.
Fremont, CA 94538
510 498-1171
North Bay Office:
1425 N. McDowell Blvd
Suite 115
Petaluma, CA 94954
707 664-8443
www.syserco.com
Cont. License # 483939

SYSERCO ENGINEER
AP

ENG. CHK | SALES CHK

DATE
10/21/09

ENGINEER
RUMSEY ENGINEERS
99 LINDEN STREET
OAKLAND, CA 94607
510.663.2070
510.663.2080 FAX

CONTRACTOR
OVERAA CONSTRUCTION
200 PARR BLVD
RICHMOND, CA 94801
510.234.0926
510.237.2435 FAX

△	DATE	DESCRIPTION	BY
	10/21/09	SUBMITTALS	AP
△	03/09/10	REVISION 1	AP

PROJECT
CALIFORNIA SHAKESPEARE- PHASE 1
100 GATEWAY BLVD, ORINDA CA 94563

BACtalk
ALERTON® AUTHORIZED DEALER

FILE

JOB NUMBER
C0B021

SHEET I.D.
CC 2.02

Syserco, Inc. reserves the right to modify the submittal package in accordance with field conditions.

CALIFORNIA SHAKESPEARE THEATER PHASE-1

100 GATEWAY BLVD, ORINDA CALIFORNIA 94563

ALERTON®
AUTHORIZED DEALER

BACtalk

ENERGY MANAGEMENT SYSTEM DIAGRAMS

FOR SUBMITTAL ONLY

AREA MAP

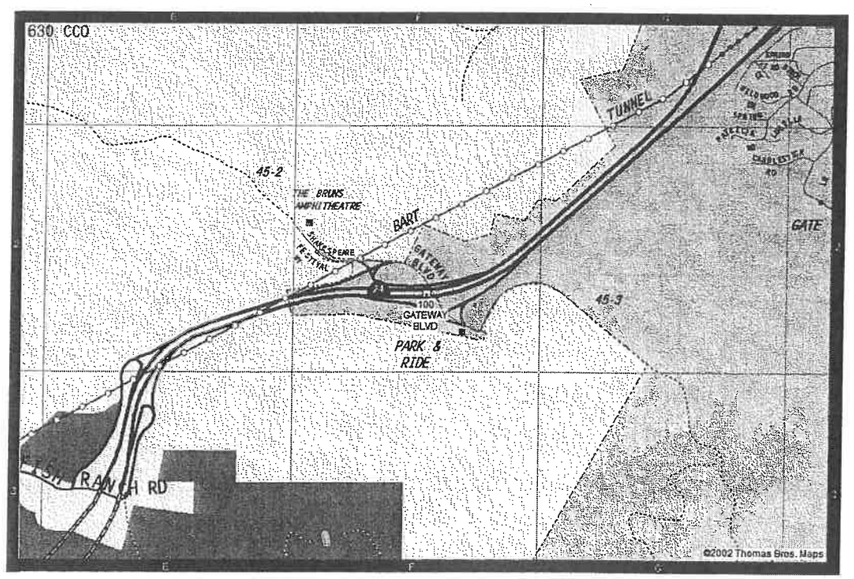

SITE LOCATION

VICINITY MAP

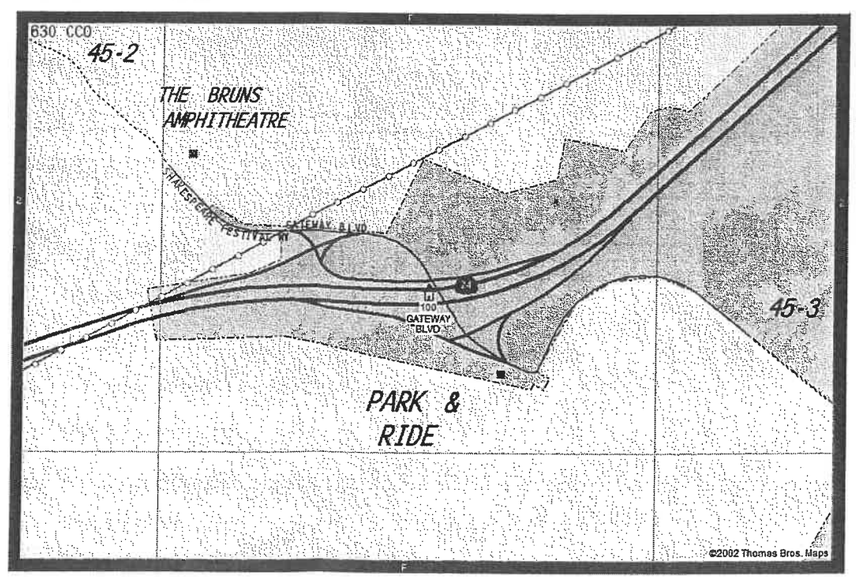

DRAWING INDEX

PAGE#	DESCRIPTION
CC 0.01A	TITLE SHEET
CC 0.02	GLOBAL DEVICE ADDRESS CHART
CC 0.03	BCM GLOBAL CONTROLLER WIRING DIAGRAM
CC 0.03P	BCM GLOBAL CONTROLLER PANLE LAYOUT
CC 0.04A	BCM-ETH # 219 ADDRESS CHART
CC 0.05A	SEQUENCE OF OPERATIONS
CC 0.06	BCM-ETH # 219 CONFIGURATION SETTINGS
CC 1.01A	TYPICAL HP-1 & HP-2 UNIT WIRING CONTROL DIAGRAM
CC 1.01P	TYPICAL HP-1 & HP-2 UNIT WIRING PANEL LAYOUT
CC 1.02A	TYPICAL EF-4 UNIT WIRING CONTROL DIAGRAM
CC 1.02P	TYPICAL EF-4 UNIT WIRING PANEL LAYOUT
CC 2.01	HEAT PUMP 1 & 2 FLOOR PLAN
CC 2.02	EXHAUST FAN 4 FLOOR PLAN

VERSION: XXXXXXXXXX

Syserco
Integrated Building Systems
Main Office:
44244 Fremont Blvd.
Fremont, CA 94538
510 498-1171
North Bay Office:
1425 N. McDowell Blvd
Suite 115
Petaluma, CA 94954
707 664-8443
www.syserco.com
Cont. License # 483939

SYSERCO ENGINEER: AP
ENG. CHK | SALES CHK
DATE: 10/21/09

ENGINEER
RUMSEY ENGINEERS
99 LINDEN STREET
OAKLAND, CA 94607
510.663.2070
510.663.2080 FAX

CONTRACTOR
OVERAA CONSTRUCTION
200 PARR BLVD
RICHMOND, CA 94801
510.234.0926
510.237.2435 FAX

△	DATE	DESCRIPTION	BY
	10/21/09	SUBMITTALS	AP
△1	03/09/10	REVISION 1	AP

PROJECT: CALIFORNIA SHAKESPEARE- PHASE 1
100 GATEWAY BLVD, ORINDA CA 94563
BACtalk
ALERTON® AUTHORIZED DEALER

FILE
JOB NUMBER: C0B021
SHEET I.D.: CC 0.01A

99 Linden Street
Oakland, CA 94607
510 663-2070 T
510 663-2080 F
RUMSEY ENGINEERS ENERGY EFFICIENT DESIGN

SUBMITTAL / SHOP DRAWING

RETURNED HEREWITH, HAS BEEN REVIEWED FOR GENERAL DESIGN AND COMPLIANCE WITH CONTRACT DOCUMENTS TO THE EXTENT SHOWN. CONTRACTOR IS RESPONSIBLE FOR DIMENSIONS, QUANTITIES, FIELD CONDITIONS, PERFORMANCE AND COORDINATING WITH OTHER TRADES AND IS NOT RELIEVED FROM RESPONSIBILITY FOR UNAUTHORIZED DEVIATIONS FROM CONTRACT DOCUMENTS.

SUBMISSION REVIEW:

- ☐ NO EXCEPTION TAKEN
- ☐ MAKE CORRECTIONS NOTED
- ☒ REVISE AND RESUBMIT

BY: T. Bradshaw DATE: 03/22/10

COMMENTS:

SEE SCANNED HAND WRITTEN COMMENTS

CALIFORNIA SHAKESPEARE THEATER GLOBAL DEVICE ADDRESS MAP

DEVICE ID	DEVICE TYPE	DESCRIPTION	USER	LOCATION	SYSERCO JOB#
0-9	Customer Equiment	RESERVED			
10	Server	RESERVED			
11-49	Customer Laptops	RESERVED			
50-99	Workstations	RESERVED			
51	DELL			LOOK AT FLOOR PLANS	
100-150	Syserco Laptops	RESERVED			
200-250	BCM'S	RESERVED			
201	BCM-ETH	Global Controller		CALIFORNIA SHAKESPEARE THEATER- ORINDA, CALIFORNIA	COB021
202	BCM-WEB	Global Controller		CALIFORNIA SHAKESPEARE THEATER- ORINDA, CALIFORNIA	COB021
300-530	Unitary Controllers	RESERVED			
1000-50000	Unitary Controllers	RESERVED			
1000-1999	VLC's	Unitary Controller		CALIFORNIA SHAKESPEARE THEATER- ORINDA, CALIFORNIA	COB021

GLOBAL DEVICE ADDRESS CHART

Syserco Integrated Building Systems
Main Office:
44244 Fremont Blvd.
Fremont, CA 94538
510 498-1171
North Bay Office:
1425 N. McDowell Blvd
Suite 115
Petaluma, CA 94954
707 664-8443
www.syserco.com
Cont. License # 483939

SYSERCO ENGINEER: AP
ENG. CHK | SALES CHK
DATE: 10/21/09

ENGINEER
RUMSEY ENGINEERS
99 LINDEN STREET
OAKLAND, CA 94607
510.663.2070
510.663.2080 FAX

CONTRACTOR
OVERAA CONSTRUCTION
200 PARR BLVD
RICHMOND, CA 94801
510.234.0926
510.237.2435 FAX

DATE	DESCRIPTION	BY
10/21/09	SUBMITTALS	AP
03/09/10	REVISION 1	AP

PROJECT: CALIFORNIA SHAKESPEARE- PHASE 1
100 GATEWAY BLVD, ORINDA CA 94563

ALERTON AUTHORIZED DEALER BACtalk

FILE
JOB NUMBER: COB021
SHEET I.D.: CC 0.02

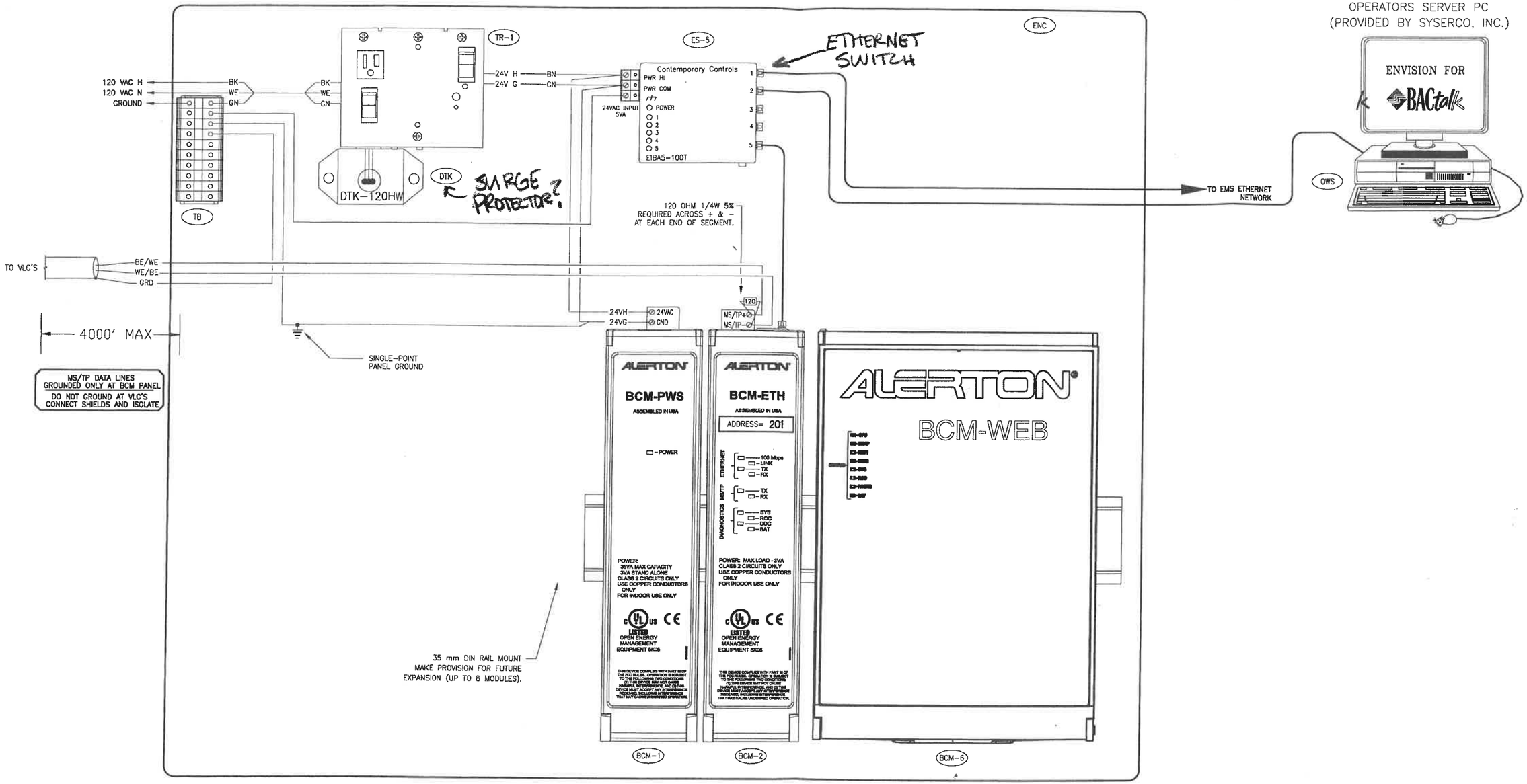

PANEL DEVICES				
TAG	QTY	PART NUMBER	DESCRIPTION	COMMENTS
ENC	1	A24N24ALP	HOFFMAN NEMA-1 24X24 ENCLOSURE	
	1	A24N24MP	HOFFMAN 24X24 MOUNTING PLATE	
	1	A-L12-8	HOFFMAN KEY LOCK KIT FOR TCP	
BCM-1	1	BCM-PWS	ALERTON BACtalk CONTROL MODULE	POWER SUPPLY
BCM-2	1	BCM-ETH	ALERTON BACtalk CONTROL MODULE	W/1 ETHERNET LAN, 1 MS/TP LAN
BCM-6	1	BCM-WEB	ALERTON BACtalk CONTROL MODULE	128 VLC SUPPORT, WEB CAPABILITY
TR-1	1	PSH100AWB10	FUNCTIONAL DEVICES POWER SUPPLY	W/10 AMP SWITCH/BREAKER, INTERNAL WIRES
TB	10	165 113 16	ABB ENTRELEC GROUND BLOCK M4/6.P	24G (GREEN/YELLOW)
	1	103 062 21	ABB ENTRELEC FEM6 END SECTION	YELLOW
	2	103 002 26	ABB ENTRELEC BAM END STOP	GRAY
	1	176 667 04	ABB ENTRELEC ASSEMBLED JUMPER BAR	W/IP20 PROTECTION (10 POLES)
FIELD DEVICES				
OWS	1	OPTIPLEX 360	DELL DESKTOP COMPUTER	

NOT LISTED → ES-5 DTK

BCM GLOBAL CONTROLLER WIRING DIAGRAM

Syserco
Integrated Building Systems
Main Office:
44244 Fremont Blvd.
Fremont, CA 94538
510 498-1171
North Bay Office:
1425 N. McDowell Blvd
Suite 115
Petaluma, CA 94954
707 664-8443
www.syserco.com
Cont. License # 483939

SYSERCO ENGINEER: AP

ENG. CHK | SALES CHK

DATE: 10/21/09

ENGINEER
RUMSEY ENGINEERS
99 LINDEN STREET
OAKLAND, CA 94607
510.663.2070
510.663.2080 FAX

CONTRACTOR
OVERAA CONSTRUCTION
200 PARR BLVD
RICHMOND, CA 94801
510.234.0926
510.237.2435 FAX

△	DATE	DESCRIPTION	BY
	10/21/09	SUBMITTALS	AP
1	03/09/10	REVISION 1	AP

PROJECT: CALIFORNIA SHAKESPEARE- PHASE 1
100 GATEWAY BLVD, ORINDA CA 94563

ALERTON AUTHORIZED DEALER BACtalk

FILE

JOB NUMBER: COB021

SHEET I.D.: CC 0.03

TYPICAL BCM GLOBAL CONTROLLER PANEL

HOFFMAN MEDIUM NEMA-1 ENCLOSURE - 24"x24"

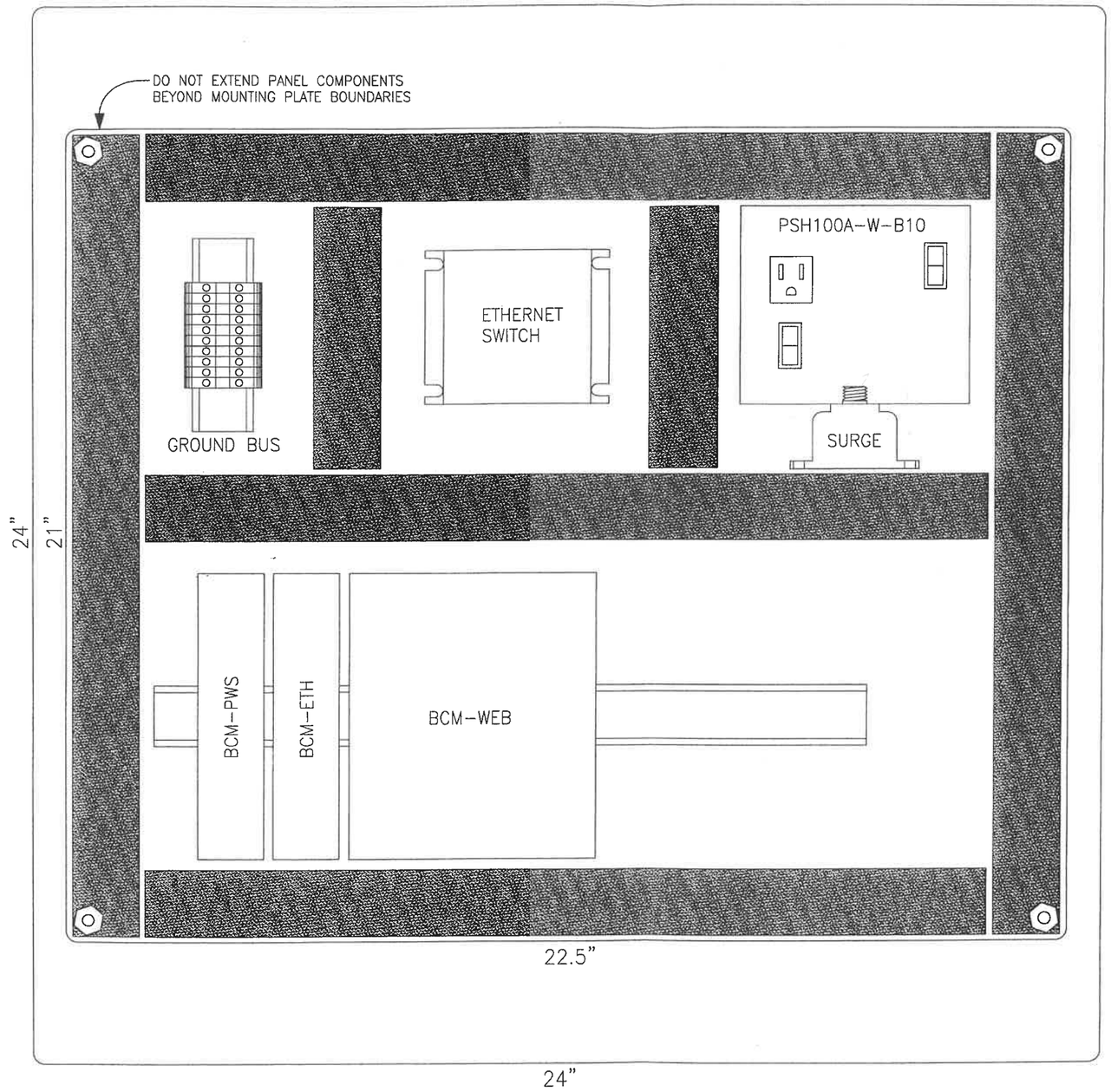

BCM GLOBAL CONTROLLER PANEL LAYOUT DIAGRAM

Syserco
Integrated Building Systems

Main Office:
44244 Fremont Blvd.
Fremont, CA 94538
510 498-1171

North Bay Office:
1425 N. McDowell Blvd
Suite 115
Petaluma, CA 94954
707 664-8443
www.syserco.com
Cont. License # 483939

SYSERCO ENGINEER
AP

ENG. CHK | *SALES CHK*

DATE
10/21/09

ENGINEER
RUMSEY ENGINEERS
99 LINDEN STREET
OAKLAND, CA 94607
510.663.2070
510.663.2080 FAX

CONTRACTOR
OVERAA CONSTRUCTION
200 PARR BLVD
RICHMOND, CA 94801
510.234.0926
510.237.2435 FAX

△	DATE	DESCRIPTION	BY
	10/21/09	SUBMITTALS	AP
△	03/09/10	REVISION 1	AP

PROJECT
CALIFORNIA SHAKESPEARE- PHASE 1
100 GATEWAY BLVD, ORINDA CA 94563

ALERTON® AUTHORIZED DEALER
BACtalk

FILE

JOB NUMBER
C0B021

SHEET I.D.
CC 0.03P

1	BCM-ETH NETWORK ADDRESS INFORMATION							
			Device Instance	201				
			Ethernet Network No.	10				
			Location					
	MS/TP LAN			NETWORK	2011			
Device Instance	MAC Add.	Dev.Type	Description	Serving	Bldg.	JOB NO.	INTERLOCK	DWG.
201	127							
1101	1	VLC-651R	HP-1	DRESSING ROOM	THEATER	C0B021		CC 1.01
1102	2	VLC-651R	HP-2	DRESSING ROOM	THEATER	C0B021		CC 1.01
1103	3							
1104	4	VLC-550	EF-4	BATHROOM EXHAUST	THEATER	C0B021		CC 1.02
1105	5							
1106	6							
1107	7							
1108	8							
1109	9							
1110	10							
1111	11							
1112	12							
1113	13							
1114	14							
1115	15							
1116	16							
1117	17							
1118	18							
1119	19							
1120	20							
1121	21							
1122	22							
1123	23							
1124	24							
1125	25							
1126	26							
1127	27							
1128	28							
1129	29							
1130	30							
1131	31							
1132	32							
1133	33							
1134	34							
1135	35							
1136	36							
1137	37							
1138	38							
1139	39							
1140	40							
1141	41							
1142	42							
1143	43							
1144	44							
1145	45							
1146	46							
1147	47							
1148	48							
1149	49							
1150	50							
1151	51							
1152	52							
1153	53							
1154	54							
1155	55							
1156	56							
1157	57							
1158	58							
1159	59							
1160	60							
1161	61							
1162	62							
1163	63							
1164	64							

GENERAL SUBMITTAL REVIEW NOTES:

- REVIEW 15900.1.10 SUBMITTALS, MOST OF THE REQUIREMENTS IN THIS SECTION HAVE NOT BEEN INCLUDED IN CONTROLS SUBMITTAL PACKAGE
- A PROJECT INCLUSIVE POINTS LIST MUST BE PROVIDED FOR ALL SYSTEMS CONTROLLED & MONITORED FROM GUI/BMS. RECOMMEND FOLLOWING FORMAT OF POINTS LIST SHOWN IN 15900.

BCM-ETH # 201 ADDRESS CHART

Syserco Integrated Building Systems
Main Office:
44244 Fremont Blvd.
Fremont, CA 94538
510 498-1171
North Bay Office:
1425 N. McDowell Blvd
Suite 115
Petaluma, CA 94954
707 664-8443
www.syserco.com
Cont. License # 483939

SYSERCO ENGINEER: AP
ENG. CHK | SALES CHK
DATE: 10/21/09

ENGINEER
RUMSEY ENGINEERS
99 LINDEN STREET
OAKLAND, CA 94607
510.663.2070
510.663.2080 FAX

CONTRACTOR
OVERAA CONSTRUCTION
200 PARR BLVD
RICHMOND, CA 94801
510.234.0926
510.237.2435 FAX

△	DATE	DESCRIPTION	BY
	10/21/09	SUBMITTALS	AP
△1	03/09/10	REVISION 1	AP

PROJECT
CALIFORNIA SHAKESPEARE- PHASE 1
100 GATEWAY BLVD, ORINDA CA 94563

ALERTON® AUTHORIZED DEALER
BACtalk

FILE
JOB NUMBER: C0B021
SHEET I.D.: CC 0.04A

ACCESSORY ORIENTATION CHART					
ITEM	SERVICE	SIZE	REF DEGREE	RADIUS	ELEV. FROM BOTTOM OF TANK STEEL TO CTR OF ACCESSORY UNLESS NOTED OTHERWISE
13A/14	SHELL MANWAY	24"	120	--	2'-6"
13B/14	SHELL MANWAY	24"	300	--	2'-6"
24A/25	150# R.F.S.O.-INLET NOZZLE	6"	45	--	2'-6"
24B/26/27	150# R.F.S.O.-SUCTION NOZZLE	6"	30	--	2'-0"
28	LEVEL SENSOR - HALF CPLG	3/4"	110	--	18'-5 5/8"
29	150# R.F.S.O.-DRAIN NOZZLE	4"	180	--	8 5/8"
31 - 39	OVERFLOW W/ FLAP VALVE	8"	20	--	SEE DETAIL
9	EXT. LADDER	STD.	327.6	--	--
41	TANK CONNECTION LOGO	STD.	135	--	CENTERED IN PANEL
42	NAME PLATE	STD.	120	--	CENTER OF MANWAY

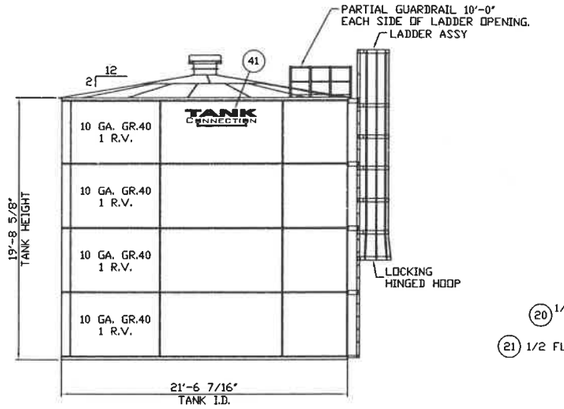

ELEVATION VIEW

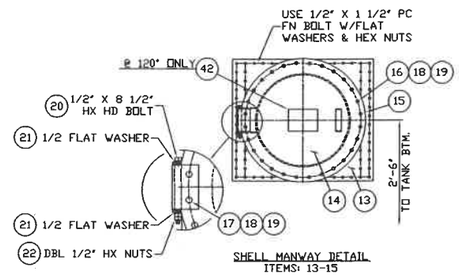

SHELL MANWAY DETAIL
ITEMS: 13-15

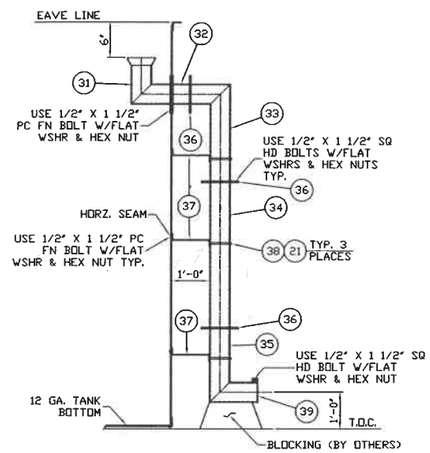

8" OVERFLOW DETAIL
ITEMS: 31 THRU 39

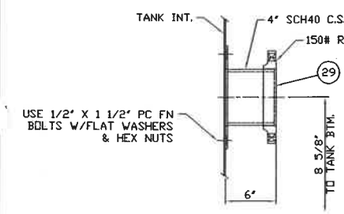

4" DRAIN DETAIL
ITEM: 29

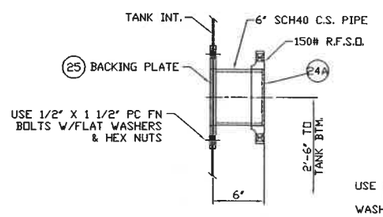

6" INLET DETAIL
ITEMS: 24A & 25

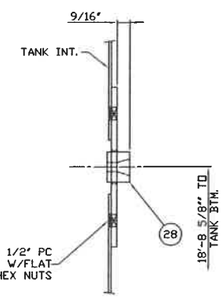

3/4" SENSOR DETAIL
ITEM: 28

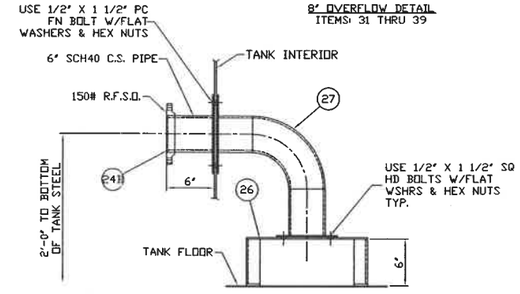

6" SUCTION DETAIL
ITEMS: 24B, 26 & 27

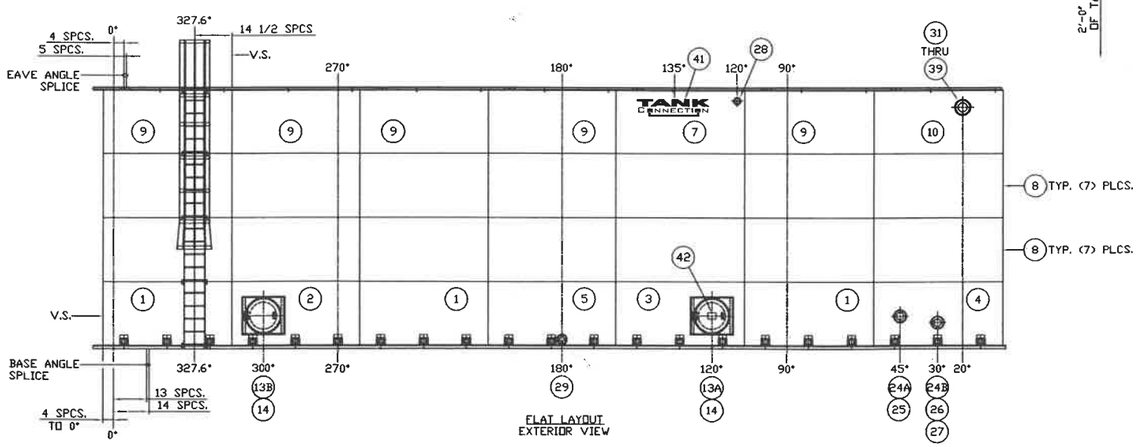

FLAT LAYOUT
EXTERIOR VIEW

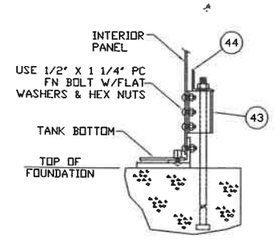

ANCHOR BOLT DETAIL
ITEMS: 43 & 44

ITEM	D/S	PART NO.	QTY	DESCRIPTION	EST. WT.	PAINT
1	B	1255001002	3	BTM. PANEL 10GA. 1RV GR.40 W/A.B. PCHG	270	I/E
2	B	1255001001	1	BTM. PANEL 10GA. 1RV. GR.40 W/MANWAY & A.B. PCHG.	245	I/E
3	B	1255001003	1	BTM. PANEL 10GA. 1RV. GR.40 W/MANWAY & A.B. PCHG.	245	I/E
4	B	1255001004	1	BTM. PANEL 10GA. 1RV. GR.40 W/NOZZLE PCHG.	268	I/E
5	B	1255001005	1	BTM. PANEL 10GA. 1RV. GR.40 W/NOZZLE PCHG.	269	I/E
6						
7	B	1255001010	1	TOP PANEL 10GA. 1RV. GR.40 W/RAFTER & CPLG PCHG.	268	I/E
8	B	BP2158521307	14	MID PANEL 10GA. 1RV GR.40 PLAIN	270	I/E
9	B	1255001006	5	TOP PANEL 10GA. 1RV. GR.40 W/RAFTER PCHG.	270	I/E
10	B	1255001007	1	TOP PANEL 10GA. 1RV. GR.40 W/RAFTER & NOZZLE PCHG.	268	I/E
11						
12						
13	B	SM242112173	2	BOLT-ON SHELL MANWAY 24" DIA 2RV	145	I/E
14	B	MWC37524	2	MANWAY COVER 3/8"PL 24" DIA	96	I/E
15	B	MWGSKTE2428	2	MANWAY GASKET 24" EPDM		N
16	-	BLTHG07502000	57	3/4" X 2" HX HD BOLT HDG A325		N
17	-	BLTHG07502500	5	3/4" X 2 1/2" HX HD BOLT HDG A325		N
18	-	WSHFG0750	62	3/4" FLAT WASHER HDG F436		N
19	-	NUTHG0750	62	3/4" HEX NUT HDG A325		N
20	-	BLTHG05008500	2	1/2" X 8 1/2" HX HD BOLT HDG GR.5		N
21	-	WSHFG0500	6	1/2" FLAT WASHER HDG		N
22	-	NUTHG0500	6	1/2" HEX NUT HDG		N
23	-	BLTSQJS05001500	85	BOLT 1/2" X 1 1/2" SQ HD JS500 GR. 8.2		N
24	B	BNR15006	2	6" 150# RFSO FLANGE NOZZLE 6" PROJ.	33	I/E
25	B	SF0600	1	6" BACKING FLG 1/4" PL	6	I
26	B	AVBX06	1	6" ANTI VORTEX BOX	23	I
27	B	1255001008	1	6" ANTI VORTEX 90° ELBOW	65	I
28	B	CPHC0750	1	3/4" HALF COUPLING FLANGE PL.	3	I/E
29	B	BNR15004	1	4" 150# RFSO FLANGE NOZZLE 6" PROJ.	22	I/E
30						
31	B	BINWIER	1	8" WEIR SECTION	61	I
32	B	BNS08	1	8" SPOOL FLANGE NOZZLE	30	I/E
33	B	OFT0840058	1	8" UPPER OVERFLOW 58" SECTION	179	E
34	B	1255001009	1	8" OVERFLOW MID. SECTION 7'-7"	231	E
35	B	OFB0840058	1	8" OVERFLOW BTM. SECTION 58"	173	E
36	A	EGSF0800	3	8" SPOOL GASKET EPDM		N
37	B	PSBS08	3	PIPE SUPPORT BRACKET 8" HL'S STRADDLE C/L	10	E
38	-	UBTPG8625	3	U-BOLT W/ NUTS 8" PIPE GALV		N
39	B	CP061198019	1	8" OVERFLOW FLAP	4	E
40						
41	-	---	1	TC LOGO		N
42	A	NMPLT1255001	1	NAMEPLATE		N
43	B	ABSAD2	21	ANCHOR BOLT SADDLE FOR 7/8" BOLT	4	Z
44	B	CP061006143	21	ANCHOR BOLT CLIP FOR 7/8" BOLT	3	Z

(ROLL ALL PANELS TO 21'-6 7/16" DIA.)
ASSY. WT.= 9,290#

SAFETY/OPERATIONAL NOTES:
1) THIS TANK IS DESIGNED FOR LOADS FROM A LIQUID PRODUCT.
2) DO NOT FIELD CUT ANY OPENINGS IN TANK WITHOUT WRITTEN CONSENT FROM TANK CONNECTION LLC.
3) WIND BRACING TO BE FURNISHED BY CUSTOMER AS REQUIRED FOR EQUIPMENT ON TOP OF TANK.
4) TANK FOUNDATIONS SHALL BE LEVEL WITHIN 1/8" IN ANY 30 FT. CIRCUMFERENCE UNDER THE SHELL. LEVELNESS ON THE CIRCUMFERENCE SHALL NOT VARY MORE THAN 1/4" FROM AN ESTABLISHED PLANE. TANK PADDING TO BE USED ON CONCRETE OR ASPHALT FOUNDATIONS. VAPOR BARRIER TO BE USED ON GRAVEL OR SAND FOUNDATIONS.
5) IF ANCHOR BOLTS ARE NOT PROVIDED BY TANK CONNECTION LLC OR IF TANK IS SUPPORTED BY LOAD CELLS, PROPER ANCHORING FOR ALL WIND AND SEISMIC LOADS IS THE RESPONSIBILITY OF THE CUSTOMER.
6) APPLICATION OF LOADS TO TANK FROM EQUIPMENT, OTHER THAN NOTED ON THIS DRAWING, MUST BE APPROVED IN WRITING BY TANK CONNECTION LLC PRIOR TO INSTALLATION.
7) THIS TANK IS DESIGNED AS AN ATMOSPHERIC UNIT THAT OPERATES ON AN EQUALIZED PRESSURE INTERNALLY AND EXTERNALLY. CUSTOMER IS TO ASSURE PROPER VENTILATION IS PROVIDED AND MAINTAINED.
8) TANK SHELL MUST BE ADEQUATELY BRACED DURING ERECTION TO ELIMINATE DAMAGE WHICH MAY BE CAUSED BY WIND.

ERECTION NOTES:
1) USE ONLY BOLTS FURNISHED WITH TANK. BOLTS MUST MEET SPECIAL HIGH STRENGTH REQUIREMENTS.
2) ERECT TANK SEGMENTS IN A COUNTER-CLOCKWISE DIRECTION WHEN WORKING FROM TOP DOWN. ERECT TANK SEGMENTS IN A CLOCKWISE DIRECTION WHEN WORKING FROM BOTTOM UP.
3) TANK SHALL BE ADEQUATELY BRACED DURING ERECTION TO ELIMINATE DAMAGE WHICH MAY BE CAUSED BY WIND.
4) TANK PANELS AND DECK SEGMENTS MAY BE ORIENTED TO SUIT UNLESS SPECIAL ORIENTATION IS REQUIRED.
5) WHEN ENCAPSULATED BOLTS ARE REQ'D. THEY ARE TO BE USED ONLY IN THE PRODUCT ZONE. ENCAPSULATED BOLTS ARE NOT SUPPLIED FOR THE DECK SEAMS UNLESS NOTED OTHERWISE.
6) ERECTION CONTRACTOR TO COORDINATE THE TOUCH-UP PAINTING TO ASSURE THE PROPER PAINT IS APPLIED TO INTERIOR AND EXTERIOR SURFACES. CONTRACTOR TO FOLLOW MANUFACTURER'S LABEL INSTRUCTIONS.
7) ADEQUATE BLOCKING SHOULD BE USED TO PROTECT PANELS IF REMOVED FROM SHIPPING PALLETS PRIOR TO ERECTION.

DESIGN CRITERIA
1) TANK DESIGN PER: NFPA 22-03
2) SEISMIC DESIGN PER: CBC - IBC 2006/ASCE 7-05, Ss=158.7%, S1=62.7%, I=1.50, CLASS D, GROUP 3
3) WIND DESIGN PER: CBC - IBC 2006/ASCE 7-05, 90MPH, EXP C, I=1.15
4) DECK IS DESIGNED FOR 25 PSF LIVE LOAD
5) TANK IS DESIGNED FOR STORAGE OF FIRE PROTECTION WATER WITH A SPECIFIC GRAVITY OF 1.0
6) TANK CAPACITY: 51,000 GALLONS BASED ON 12" FREE BOARD
7) TANK WEIGHT: 16,000# EMPTY. 5% ADDED FOR HARDWARE.
8) HARDWARE: SIDEWALL & DECK SEGMENTS: POLY CAP BOLTS W/JS500 NUTS & WASHERS
DECK STRUCTURE: SS HEX HD BOLTS W/SS HEX NUTS & SS FLAT WASHERS
FLOOR: F/N BOLTS W/JS500 NUTS, WASHERS & NUT CAPS
9) GASKET MATERIAL: EPDM

TANK COATINGS:
INTERIOR: LIQ FUSION 7000 FBE (7 MILS AVG DFT)
BOTH SIDES OF FLAT BOTTOM: LIQ FUSION 7000 FBE (7 MILS AVG DFT)
EXTERIOR PRIMER: EXT FUSION 5000 FBE (3 MILS AVG DFT)
EXTERIOR TOPCOAT: GRAY (RAL 7035) EXT FUSION SDP (3 MILS AVG DFT)
SEALANT COLOR: GRAY
NOTE: ALL COATINGS ARE APPLIED OVER AN SP10 SURFACE PREP AND BAKED ON

REFERENCE DRAWINGS:

ANCHOR BOLT LAYOUT	ABARC1255001
TANK PAD LAYOUT	TPLN2154
FLOOR ASSEMBLY	FLOOR1255001
DECK STRUCTURE ASSEMBLY	DCKA1255001
DECK ASSEMBLY	DECK1255001
EXTERIOR LADDER ASSEMBLY	EL01908
INTERIOR LADDER ASSEMBLY	IL01908P
10' PARTIAL GUARDRAIL ASS'Y	GRDP10A2154
HARDWARE SHEET	HRDW1255001
20" VENT ASS'Y W/ BIRD SCREEN	VAB20B

CERTIFIED
APPROVED FOR CONSTRUCTION

TANK CONNECTION
AFFILIATE GROUP
3609 NORTH 16TH ST . PARSONS, KANSAS 67357
620.423.3010 . FAX: 620.423.3999

BY ACCEPTING POSSESSION OF THIS DOCUMENT, RECIPIENT AGREES THAT ITS CONTENTS ARE CONFIDENTIAL, PROPRIETARY TRADE SECRETS OF THE TANK CONNECTION. NO PORTION OF THIS DOCUMENT MAY BE REPRODUCED, DISTRIBUTED, OR USED IN ANY MANNER WITHOUT WRITTEN PERMISSION FROM THE TANK CONNECTION.

NO.	REV BY	DATE	REVISION
B			
A	DJC	1/18/10	REVISED FOR RELEASE

CUSTOMER	OVERRA						
PROJECT NAME AND LOCATION	CALIFORNIA SHAKESPEARE THEATER ORINDA, CA						
DWG TITLE	MAIN ASSEMBLY DETAILS						
DWN BY	MP	DWN DATE	11/01/09	JOB NO	1255	DWG NO	BCL021019125500 1
CHK BY	JA	CHK DATE	1/21/10				

ITEM	D/S	PART NUMBER	QTY	DESCRIPTION	MATL GR	WT	PAINT
1	-	BLTFJSC05001250	2380	1/2" X 1 1/4" PC FN JS 500 BOLT			N
2	-	BLTFJSC05001500	705	1/2" X 1 1/2" PC FN JS 500 BOLT			N
3	-	WSHFJS0500	3085	1/2" FLAT WASHER JS500			N
4	-	NUTHJS0500	3085	1/2" HEX NUT JS500			N
5	-	MANUSG	113	MANUS (GRAY) 20 OZ. TUBES			N

RING 1: 10GA 1RV		
LOCATION	DESCRIPTION	QTY
BASE L HORIZONTAL SEAM BOLTS	1/2" X 1 1/4" PC FN JS 500 BOLT	315
BASE L HORIZONTAL SEAM LAP BOLTS	1/2" X 1 1/2" PC FN JS 500 BOLT	7
BASE L HORIZONTAL SPLICE BOLTS	1/2" X 1 1/2" PC FN JS 500 BOLT	28
BASE L HORIZONTAL SEAM WASHERS	1/2" JS 500 FLAT WASHER	350
BASE L HORIZONTAL SEAM NUTS	1/2" JS 500 HX NUT	350
VERTICAL SEAM BOLTS	1/2" X 1 1/4" PC FN JS 500 BOLT	168
VERTICAL SEAM WASHERS	1/2" JS 500 FLAT WASHER	168
VERTICAL SEAM NUTS	1/2" JS 500 HX NUT	168
HORIZONTAL SEAM BOLTS	1/2" X 1 1/4" PC FN JS 500 BOLT	343
HORIZONTAL SEAM LAP BOLTS	1/2" X 1 1/4" PC FN JS 500 BOLT	7
HORIZONTAL SEAM WASHERS	1/2" JS 500 FLAT WASHER	350
HORIZONTAL SEAM NUTS	1/2" JS 500 HX NUT	350
SHEET SEALANT	MANUS (TUBES)	11

RING 2: 10GA. 1RV		
LOCATION	DESCRIPTION	QTY
VERTICAL SEAM BOLTS	1/2" X 1 1/4" PC FN JS 500 BOLT	168
VERTICAL SEAM WASHERS	1/2" FLAT WASHER	168
VERTICAL SEAM NUTS	1/2" HX NUT	168
HORIZONTAL SEAM BOLTS	1/2" X 1 1/4" PC FN JS 500 BOLT	343
HORIZONTAL SEAM LAP BOLTS	1/2" X 1 1/4" PC FN JS 500 BOLT	7
HORIZONTAL SEAM WASHERS	1/2" FLAT WASHER	350
HORIZONTAL SEAM NUTS	1/2" HX NUT	350
SHEET SEALANT	MANUS (TUBES)	11

RING 3: 10GA. 1RV		
LOCATION	DESCRIPTION	QTY
VERTICAL SEAM BOLTS	1/2" X 1 1/4" PC FN JS 500 BOLT	168
VERTICAL SEAM WASHERS	1/2" FLAT WASHER	168
VERTICAL SEAM NUTS	1/2" HX NUT	168
HORIZONTAL SEAM BOLTS	1/2" X 1 1/4" PC FN JS 500 BOLT	343
HORIZONTAL SEAM LAP BOLTS	1/2" X 1 1/4" PC FN JS 500 BOLT	7
HORIZONTAL SEAM WASHERS	1/2" FLAT WASHER	350
HORIZONTAL SEAM NUTS	1/2" HX NUT	350
SHEET SEALANT	MANUS (TUBES)	11

TOP RING: 10GA. 1RV		
LOCATION	DESCRIPTION	QTY
VERTICAL SEAM BOLTS	1/2" X 1 1/4" PC FN JS 500 BOLT	168
VERTICAL SEAM WASHERS	1/2" JS 500 FLAT WASHER	168
VERTICAL SEAM NUTS	1/2" JS 500 HX NUT	168
EAVE L HORIZ. SEAM BOLTS	1/2" X 1 1/2" PC FN JS 500 BOLT	315
EAVE L HORIZ. SEAM LAP BOLTS	1/2" X 1 1/2" PC FN JS 500 BOLT	7
EAVE L SPLICE BOLTS	1/2" X 1 1/2" PC FN JS 500 BOLT	28
EAVE L HORIZ. SEAM WASHERS	1/2" JS 500 FLAT WASHER	350
EAVE L HORIZ. SEAM NUTS	1/2" JS 500 HX NUT	350
SHEET SEALANT	MANUS (TUBES)	11

MISCELLANEOUS HARDWARE & GASKET		
LOCATION	DESCRIPTION	QTY
24" SHELL MANWAY BOLTS	1/2" X 1 1/2" PC FN JS 500 BOLT	172
SIDEWALL NOZZLE $ CPLG BOLTS	1/2" X 1 1/2" PC FN JS 500 BOLT	72
PIPE SUPPORT BRACKET BOLTS	1/2" X 1 1/2" PC FN JS 500 BOLT	12
ANCHOR BOLT SADDLE BOLTS	1/2" X 1 1/4" PC FN JS 500 BOLT	126
ACCESSORY WASHERS	1/2" FLAT WASHER JS 500	382
ACCESSORY NUTS	1/2" HX NUT JS 500	382
SHEET SEALANT	MANUS (TUBES)	5

FLOOR SEALANT		
LOCATION	DESCRIPTION	QTY
SHEET SEALANT	MANUS (TUBES)	54

THE INFORMATION ON THIS DOCUMENT IS CONFIDENTIAL PROPERTY OF TANK MANUFACTURER AND/OR ITS AFFILIATES. ANY OTHER USE, RETENTION, DISSEMINATION, FORWARDING, PRINTING OR COPYING OF THIS DOCUMENT TO UNAUTHORIZED PARTIES IS STRICTLY PROHIBITED, WITHOUT THE EXPRESSED WRITTEN CONSENT OF TANK MANUFACTURER.

TANK CONNECTION
AFFILIATE GROUP

REV	REVISION	DATE	BY	APP
E				
D				
C				
B				
A				

DRAWN BY:	DJC
DATE:	1/19/10
REVIEWED BY:	---
DATE:	----

HARDWARE SHEET

SCALE: NTS | DRAWING NO. HRDW1255001

ITEM	D/S	PART NO.	QTY	DESCRIPTION	EST. WT.	PAINT
1	-	ABH30708752400	21	ANCHOR BOLT HX HD 7/8" X 24" LG.		Z
2	-	WSHFGG20875	21	WASHER FLAT 7/8" HDG GR2		Z
3	-	NUTHG0875	21	NUT HEX HD 7/8" HDG A325		Z

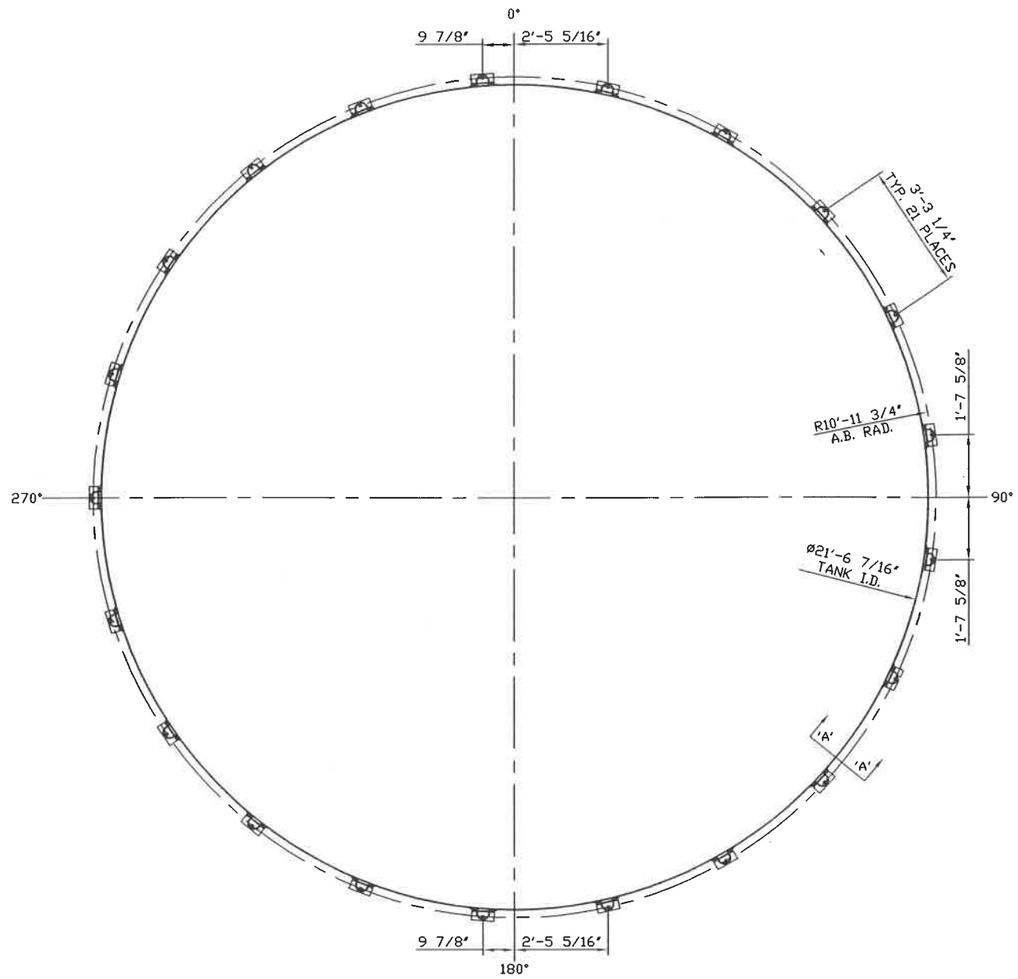

PLAN VIEW

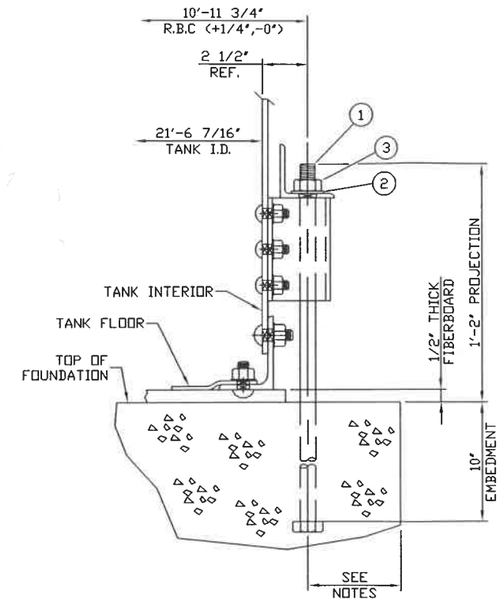

SECTION 'A'-'A'
TYPICAL 21 PLACES

NOTES:
1) DIMENSIONS SHOWN ARE TO THE NEAREST 1/16".
2) PEEN THREADS OF THE ANCHOR BOLT AFTER TIGHTENING.
3) FOUNDATION TO BE LEVEL +/-1/8" IN ANY 30' CIRCUMFERENCE UNDER THE SHELL AND +/-1/4" FROM A PLANE ON THE TOTAL CIRCUMFERENCE.
4) ANCHOR BOLT DESIGN PER AISC PART 4, GRADE A193-B7. EMBEDMENT DESIGN PER ACI 349 APP B AND ACI 355, MINIMUM CONCRETE F'c =3000PSI.
5) TO DEVELOP ANCHOR BOLT STRENGTH, FOUNDATION SHALL BE DESIGNED TO PROVIDE MINIMUM AREA AROUND ANCHOR BOLTS AS INDICATED.
6) THE MINIMUM EDGE DISTANCE BETWEEN THE ANCHOR BOLT AND EDGE OF FOUNDATION TO BE DETERMINED BY THE FOUNDATION DESIGNER.

CERTIFIED
APPROVED FOR CONSTRUCTION

CAST-IN-PLACE ANCHOR BOLT TOLERANCE	
PROJECTION	+- 1/4"
CHORD	+- 1/8"
PLUMBNESS	3 DEG FROM VERTICAL

REF. ACI 355

THE INFORMATION ON THIS DOCUMENT IS CONFIDENTIAL PROPERTY OF TANK MANUFACTURER AND/OR ITS AFFILIATES. ANY OTHER USE, RETENTION, DISSEMINATION, FORWARDING, PRINTING OR COPYING OF THIS DOCUMENT TO UNAUTHORIZED PARTIES IS STRICTLY PROHIBITED, WITHOUT THE EXPRESSED WRITTEN CONSENT OF TANK MANUFACTURER.

TANK CONNECTION
AFFILIATE GROUP

REV	REVISION	DATE	BY	APP
E				
D				
C				
B				
A				

DRAWN BY:	DJC
DATE:	1/14/10
REVIEWED BY:	JA
DATE:	1/21/10

ANCHOR BOLT LAYOUT FOR ø21' TANK

SCALE: NTS | DRAWING NO. ABARC1255001

ITEM	D/S	PART NO.	QTY	DESCRIPTION	EST. WT.	PAINT
1	–	FBRBRD0503660	30	FIBERBOARD 1/2" X 36" X 60"		N
2	–	PLSHT4ML20	46	LIN. FT. PLASTIC SHEETING 4 MIL THK. 20'–0" WIDTH		N

FIELD NOTE: PLACE LAYER OF PLASTIC SHEETING UNDER FIBER BOARD.

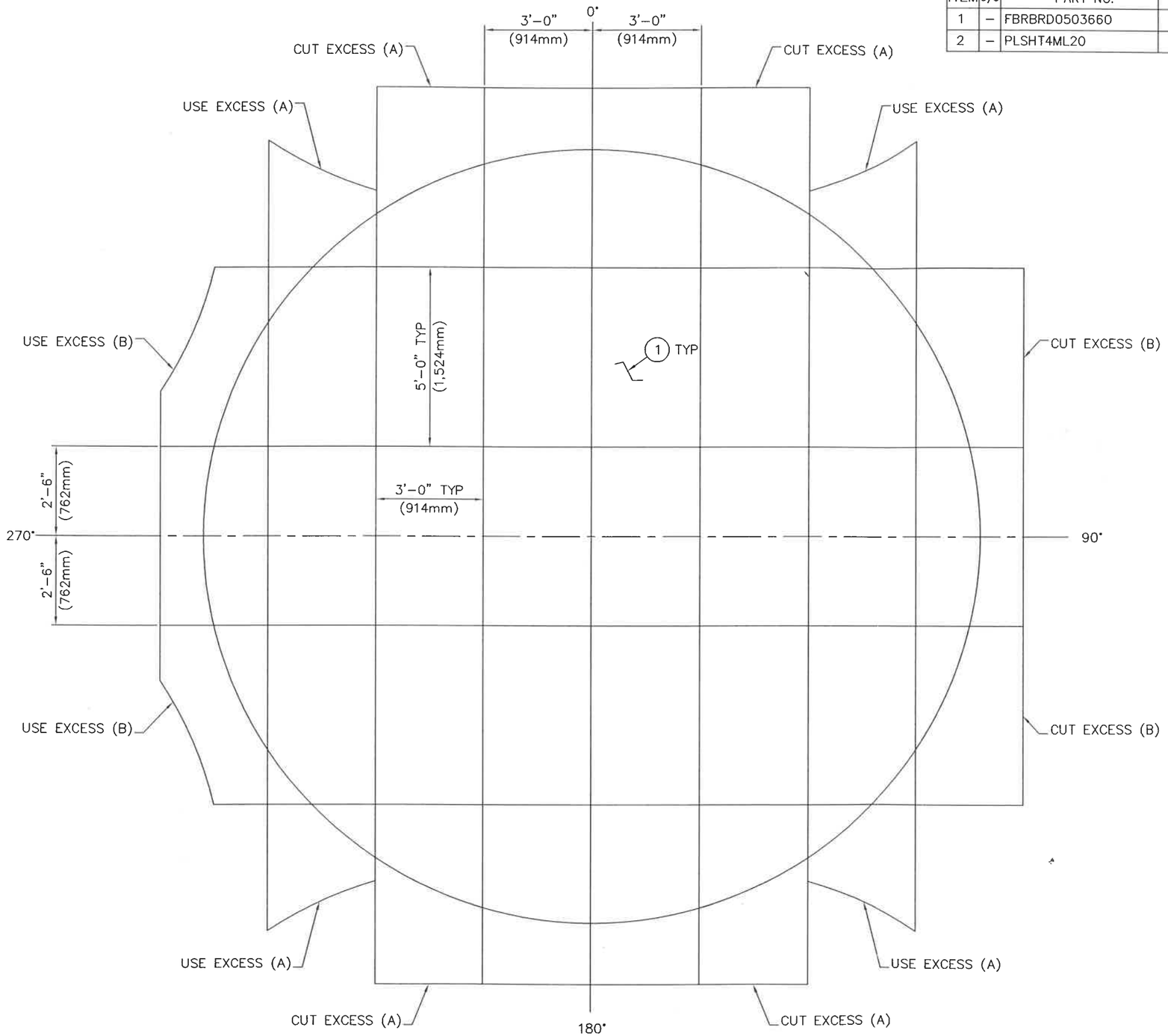

CERTIFIED
APPROVED FOR CONSTRUCTION

THE INFORMATION ON THIS DOCUMENT IS CONFIDENTIAL PROPERTY OF THE TANK MANUFACTURER AND/OR ITS AFFILIATES. ANY OTHER USE, RETENTION, DISSEMINATION, FORWARDING, PRINTING OR COPYING OF THIS DOCUMENT TO UNAUTHORIZED PARTIES IS STRICTLY PROHIBITED, WITHOUT THE EXPRESSED WRITTEN CONSENT OF THE TANK MANUFACTURER.

REV	REVISION	DATE	BY	APP
E				
D				
C				
B				
A				

DRAWN BY:	JA
DATE:	3/20/08
REVIEWED BY:	DJC
DATE:	3/27/08

TANK PAD LAYOUT FOR 21'-6 7/16"Ø TANK

SCALE: NTS | DRAWING NO. TPLN2154

ACCESSORY ORIENTATION CHART					
ITEM	SERVICE	SIZE	REF DEGREE	RADIUS	ELEV. FROM BOTTOM OF TANK STEEL TO CTR OF ACCESSORY UNLESS NOTED OTHERWISE
6/7	VENT W/ BIRD SCREEN	20"	CENTER	CENTER	---
9/10	ROOF HATCH	24" SQ.	327.6	9'-1"	--
14/15	LIQUID LEVEL INDICATOR	STD	70.5	9'-9 1/4"	--
	EXTERIOR LADDER	STD.	327.6	--	--
	INTERIOR LADDER	STD	327.6	--	--

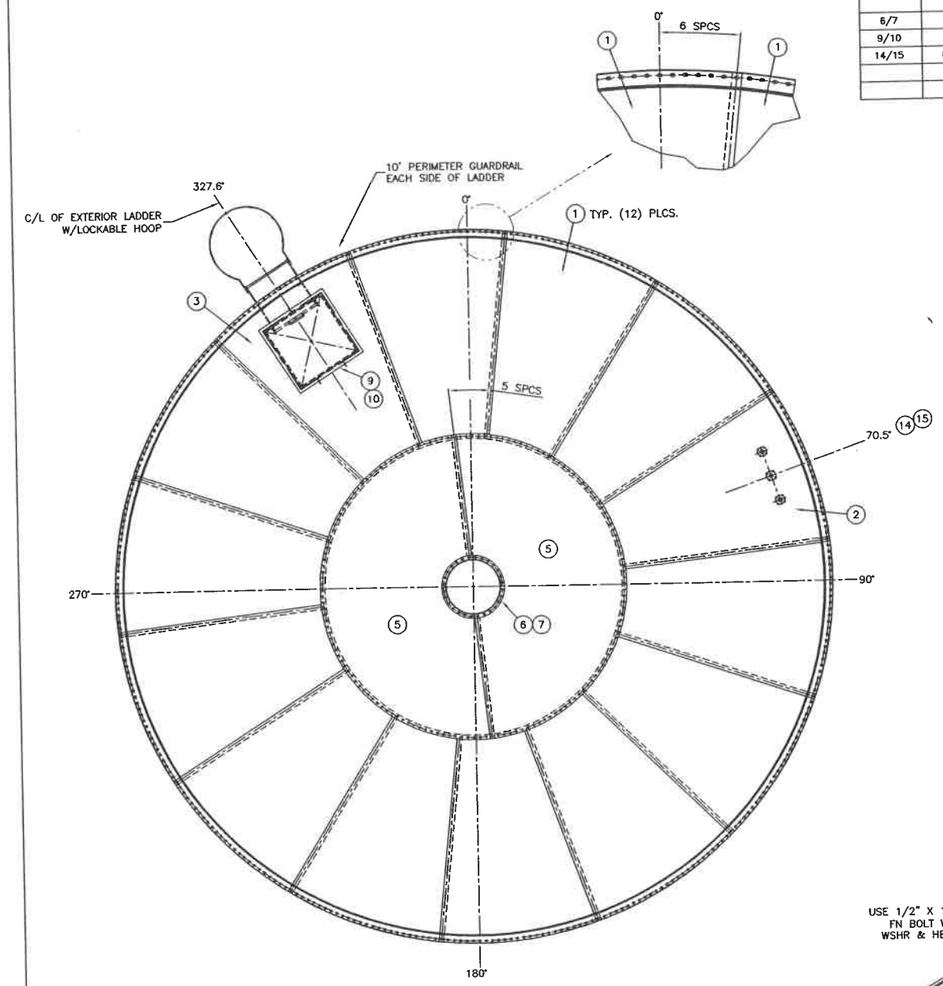

PLAN VIEW

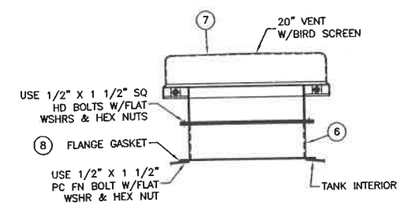

CENTER DOME W/VENT DETAIL
ITEMS: 6, 7 & 8

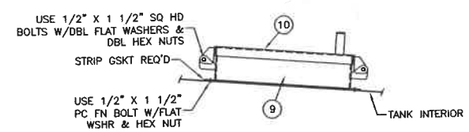

24" SQ. ROOF HATCH DETAIL
ITEMS: 9 & 10

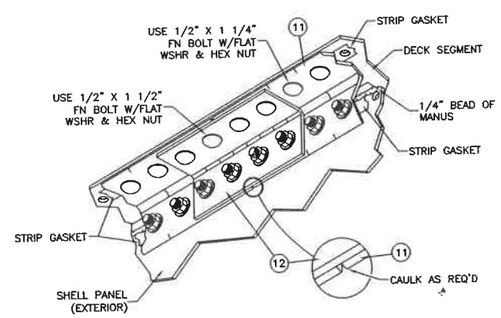

FIELD NOTE: SEE FLAT LAYOUT FOR EAVE ANGLE SPACING FROM 0°

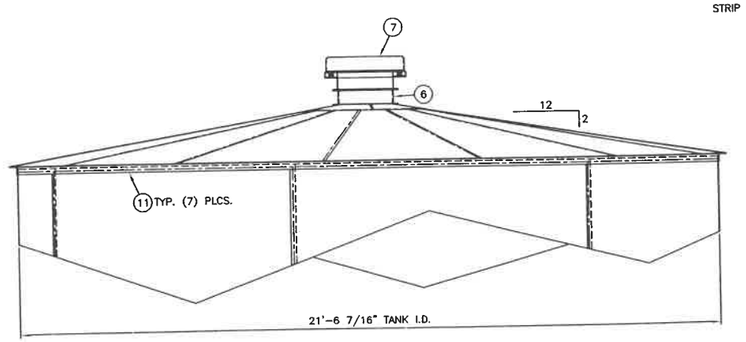

ELEVATION VIEW

ITEM	D/S	PART NO.	QTY	DESCRIPTION	EST. WT.	PAINT
1	B	BD2120010	12	DECK SEGMENT 12GA. OUTER PLAIN	102	I/E
2	B	BD2120013	1	DECK SEGMENT 12GA. OUTER W/L.L.I. PCHG	101	I/E
3	B	BD2120012	1	DECK SEGMENT 12GA. OUTER W/ROOF HATCH PCHG	85	I/E
4						
5	B	BD2120011	2	INNER SEGMENT 12GA. 1/2 SECT.	150	I/E
6	B	CP061212044	1	CENTER DOME 20" I.D. 1/4PL 2B/28 HL	49	I/E
7	B	VAB20B	1	20" VENT W/BIRD SCREEN ASSY	56	I/E
8	B	GSKTE20PRV	1	20" GASKET 28 HL EPDM		N
9	B	BCSMWN24232	1	24" SQ MNWY NECK ASSY BOLT-ON	43	I/E
10	B	WCSMWC24	1	24" SQ MNWY COVER ASSY	46	I/E
11	B	BLE071122	7	EAVE ANGLE L3" X 3" X 1/4"	46	E
12	B	ESP303025	7	EAVE ANGLE SPLICE PLATE 12GA	2	E
13						
14	–	1255001099	1	LIQUID LEVEL INDICATOR FOR 19'-8 5/8" HT. TANK		
15	–	------		HARDWARE KIT FOT LEVEL INDICATOR		
16						
17	–	BLTFJSC05001250	687	1/2" X 1 1/4" PC FN JS500 BOLT		N
18	–	BLTFJSC05001500	97	1/2" X 1 1/2" PC FN JS500 BOLT		N
19	–	BLTFJS05001250	339	1/2" X 1 1/4" FN JS500 BOLT		N
20	–	BLTFJS05001500	47	1/2" X 1 1/2" FN JS500 BOLT		N
21	–	WSHFJS0500	1174	1/2" FLAT WASHER JS500		N
22	–	NUTHJS0500	1174	1/2" HEX NUT JS500		N
23	–	BLTSQJS05001500	3	1/2" X 1 1/2" SQ HEAD BOLT JS500 GR.8.2		N
24						
25						
26	–	STRPGSKTEPDM232	312	LN. FT. 1 3/4" WIDE STRIP GASKET EPDM 2.32" C/C		N
27	–	MANUSG	8	MANUS GRAY (20 OZ. TUBES)		N
28	–	HNVNTCHGSKTWHT	35	HVY NOTCH GASKET EPDM		N
29	A	CP061402014	2	LEVEL IND BRACKET L2" X 2" X 3/16" X 8 11/16"	2	I
30	A	CP061198029	1	LEVEL IND ANGLE L2" X 2" X 3/16" X 23 1/2"	5	I

ASSY WT.= 2,329#

DECK: 12GA.		
LOCATION	DESCRIPTION	QTY
CENTER DOME BOLTS	1/2" X 1 1/2" PC FN JS 500 BOLT	26
CENTER DOME LAP BOLTS	1/2" X 1 1/2" PC FN JS 500 BOLT	2
CENTER DOME WASHERS	1/2" FLAT WASHER JS 500	28
CENTER DOME NUTS	1/2" HX NUT JS 500	28
ADAPTOR PLATE BOLTS	1/2" X 1 1/4" PC FN JS 500 BOLT	176
ADAPTOR PLATE LAP BOLTS	1/2" X 1 1/2" PC FN JS 500 BOLT	16
ADAPTOR PLATE WASHERS	1/2" FLAT WASHER JS 500	192
ADAPTOR PLATE NUTS	1/2" HX NUT JS 500	192
ADAPTOR PLATE GASKET	STRIP GASKET 1 3/4" WIDE EPDM (FEET)	37
OUTER SEGMENT RADIAL SEAM	1/2" X 1 1/4" PC FN JS 500 BOLT	448
OUTER TO EAVE ANGLE	1/2" X 1 1/4" FN JS 500 BOLT	308
OUTER TO EAVE ANGLE LAP	1/2" X 1 1/2" FN JS 500 BOLT	14
OUTER TO EAVE ANGLE SPLICE	1/2" X 1 1/2" FN JS 500 BOLT	28
OUTER TO EAVE ANGLE WASHERS	1/2" FLAT WASHER JS 500	798
OUTER TO EAVE ANGLE NUTS	1/2" HX NUT JS 500	798
OUTER SEGMENT GASKET	STRIP GASKET 1 3/4" WIDE EPDM (FEET)	228
DECK TO EAVE ANGLE GASKET	HEAVY NOTCH GASKET EPDM	32
EDGE SEALANT	MANUS (TUBES)	7
ROOF HATCH TO DECK BOLTS	1/2" X 1 1/2" PC FN JS 500 BOLT	44
ROOF HATCH TO DECK WASHERS	1/2" FLAT WASHER JS 500	44
ROOF HATCH TO DECK NUTS	1/2" HX NUT JS 500	44
ROOF HATCH TO DECK GASKET	STRIP GASKET 1 3/4" WIDE EPDM (FEET)	18
ROOF HATCH HINGE BOLTS	1/2" X 1 1/2" SQ HD BOLT JS500	2
ROOF HATCH HINGE WASHERS	1/2" FLAT WASHER JS500	4
ROOF HATCH HINGE NUTS	1/2" HX NUT JS500	4

NOTE:
EDGE SEAL AT ALL BOLTED CONNECTIONS.

NOTE:
SEE FLAT LAYOUT FOR SIDEWALL DETAILS

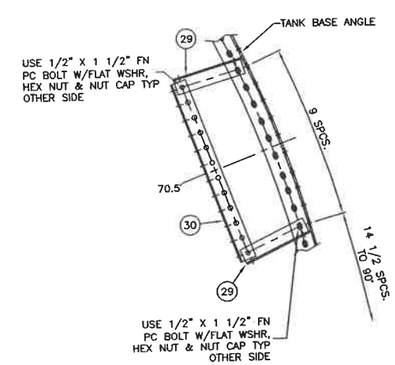

LEVEL BOARD ANGLE BRACKET DETAIL

THE INFORMATION ON THIS DOCUMENT IS CONFIDENTIAL PROPERTY OF TANK MANUFACTURER AND/OR ITS AFFILIATES. ANY OTHER USE, RETENTION, DISSEMINATION, FORWARDING, PRINTING OR COPYING OF THIS DOCUMENT TO UNAUTHORIZED PARTIES IS STRICTLY PROHIBITED, WITHOUT THE EXPRESSED WRITTEN CONSENT OF TANK MANUFACTURER.

TANK CONNECTION AFFILIATE GROUP

REV	REVISION	DATE	BY	APP
E				
D				
C				
B				
A				

DRAWN BY:	DJC
DATE:	1/18/10
REVIEWED BY:	JA
DATE:	1/21/10

DECK ASS'Y FOR 21'-6 7/16"ø TANK

SCALE: NTS | DRAWING NO. DECK1255001

ITEM	D/S	PART NO.	QTY	DESCRIPTION	EST. WT.	PAINT
1	B	CP061402016	14	C4 X 5.4# X 105 1/8" LG.	47	I
2	B	RS4214	1	14 CLIP RAFTER RING	136	I
3	B	70094011	14	1/4"PL. RAFTER CLIP	2	I
4	-	BLTHS05001500	62	1/2" X 1 1/2" SS HX HD BOLTS A304		N
5	-	WSHFS0500	62	1/2" SS FLAT WASHER A304		N
6	-	NUTHS0500	62	1/2" SS HEX NUT A316		N
7	-	BLTFJSC05001500	31	1/2" X 1 1/2" PC FN JS500 BOLT		N
8	-	WSHFJS0500	31	1/2" FLAT WASHER JS500		N
9	-	NUTHJS0500	31	1/2" HEX NUT JS500		N

ASSY. WEIGHT= 822#

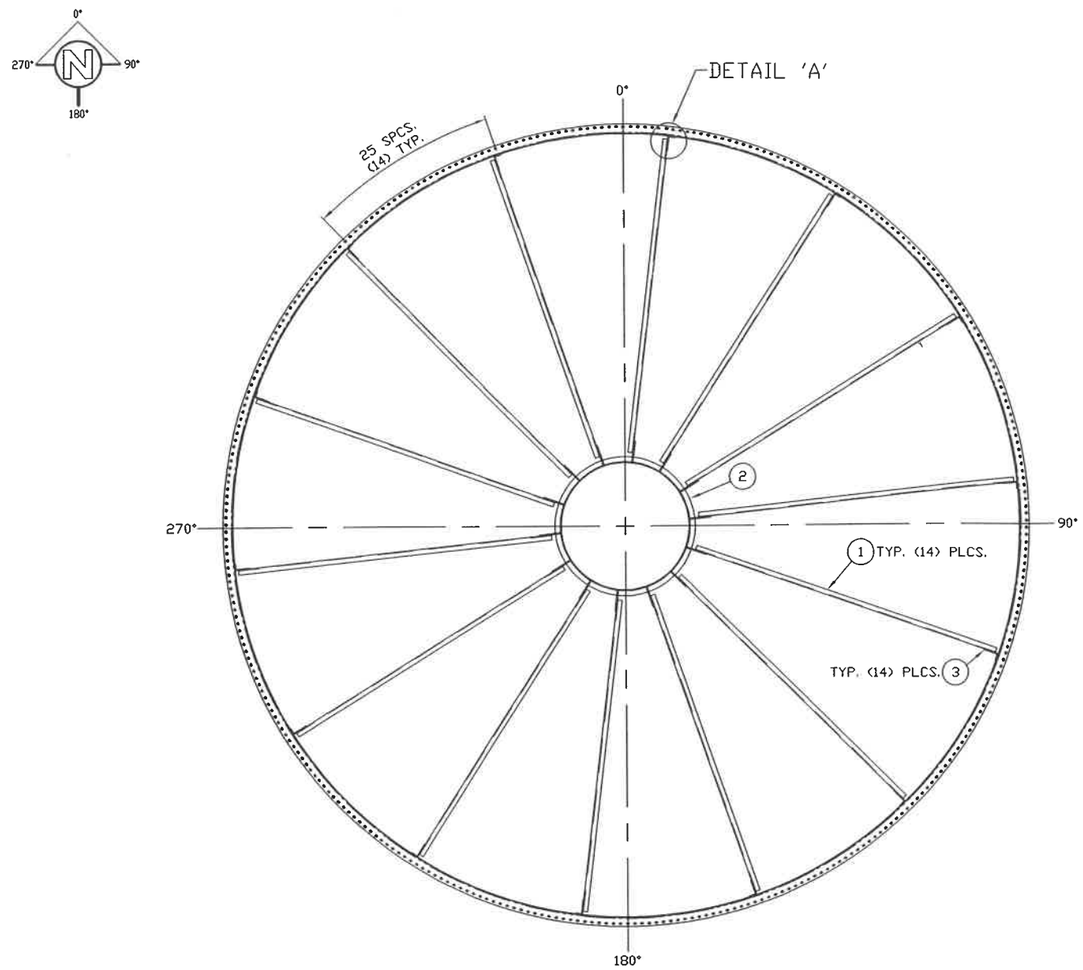

PLAN VIEW

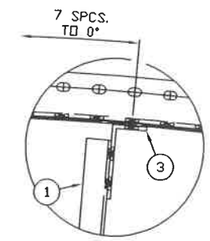

DETAIL 'A'

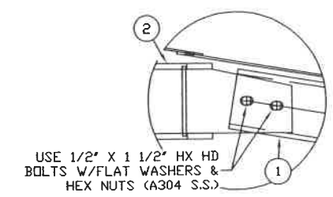

DETAIL 'B'

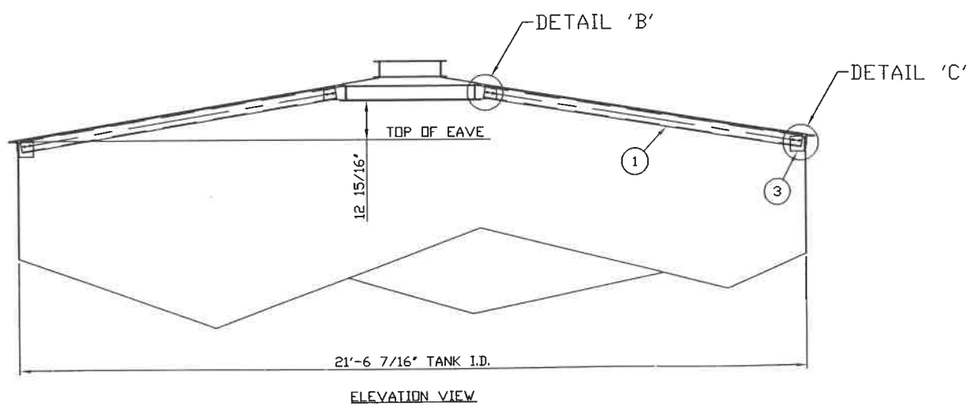

ELEVATION VIEW

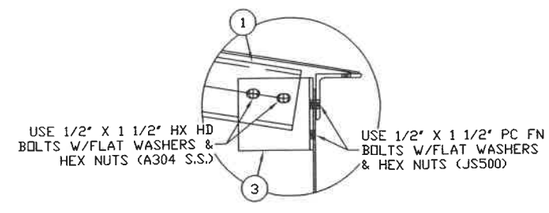

DETAIL 'C'

THE INFORMATION ON THIS DOCUMENT IS CONFIDENTIAL PROPERTY OF TANK MANUFACTURER AND/OR ITS AFFILIATES. ANY OTHER USE, RETENTION, DISSEMINATION, FORWARDING, PRINTING OR COPYING OF THIS DOCUMENT TO UNAUTHORIZED PARTIES IS STRICTLY PROHIBITED, WITHOUT THE EXPRESSED WRITTEN CONSENT OF TANK MANUFACTURER.

TANK CONNECTION

REV	REVISION	DATE	BY	APP
E				
D				
C				
B				
A				

DRAWN BY:	DJC
DATE:	1/18/10
REVIEWED BY:	JA
DATE:	1/21/10

#2154' C4 X 5.4# DECK STRUCTURE ASSY.

SCALE: NTS | DRAWING NO. DCKA12S5001

BOTTOM 12 GA.		
LOCATION	DESCRIPTION	QTY
BOTTOM SEAM BOLTS	1/2" X 1 1/4" FN JS 500 BOLT	570
BOTTOM SEAM NUTS	1/2" HEX NUT JS 500	570
BOTTOM SEAM NUT CAP	1/2" NUT CAP	570
BOTTOM SEAM FLAT WASHER	1/2" FLAT WASHER JS500	570
BOTTOM BASE ANGLE BOLTS	1/2" X 1 1/4" FN JS 500 BOLT	310
BOTTOM SEAM, BASE ANGLE LAP BOLTS	1/2" X 1 1/2" FN JS 500 BOLT	12
BOTTOM BASE ANGLE SPLICE BOLTS	1/2" X 1 1/2" FN JS 500 BOLT	28
BOTTOM BASE ANGLE NUTS	1/2" HEX NUT JS500	350
BOTTOM BASE ANGLE NUT CAP	1/2" NUT CAP	350
BOTTOM BASE ANGLE FLAT WASHER	1/2" FLAT WASHER JS500	350
SHEET SEALANT	MANUS (TUBES)	23
NUT CAP SEALANT	MANUS (TUBES)	20
BASE ANGLE SEALANT	MANUS (TUBES)	11

ITEM	D/S	PART NO.	QTY	DESCRIPTION	EST. WT.	PAINT
1	B	BF2100001	2	BOTTOM SEGMENT 12 GA.	20	I
2	B	BF2100002	2	BOTTOM SEGMENT 12 GA.	135	I
3	B	BF2100003	2	BOTTOM SEGMENT 12 GA.	20	I
4	B	BF2100004	2	BOTTOM SEGMENT 12 GA.	101	I
5	B	BF0000000	3	BOTTOM SEGMENT 12 GA.	210	I
6	B	BF2100005	2	BOTTOM SEGMENT 12 GA.	101	I
7	B	BF2100006	2	BOTTOM SEGMENT 12 GA.	126	I
8	B	BLB071321	7	BASE ANGLE L3 1/2" X 2 1/2" X 1/4"	48	E
9	B	BASI35025025	7	INTERIOR BASE ANGLE SPLICE PLATE	1	I
10	B	BASE35025025	7	EXTERIOR BASE ANGLE SPLICE PLATE	2	E
11	-	BLTJS05001250	968	1/2" X 1 1/4" FN JS500 BOLT		N
12	-	BLTJS05001500	44	1/2" X 1 1/2" FN JS500 BOLT		N
13	-	WSHFJS0500	1012	1/2" FLAT WASHER JS500		N
14	-	NUTHJS0500	1012	1/2" HEX NUT JS500		N
15	-	BTNUTCOVER1200BK	1012	1/2" NUT CAP		N

ASSY. WT.= 2,000#

NOTE: USE SEALANT AT ALL BOLTED CONNECTIONS (TYP).

FIELD NOTE: SEE FLAT LAYOUT FOR BASE ANGLE SPACING FROM 0°

NOTE: FILL NUT CAP 1/2 FULL OF MANUS BEFORE INSTALLING

NOTE: SEALENT RELEASED ON HARDWARE SHEET

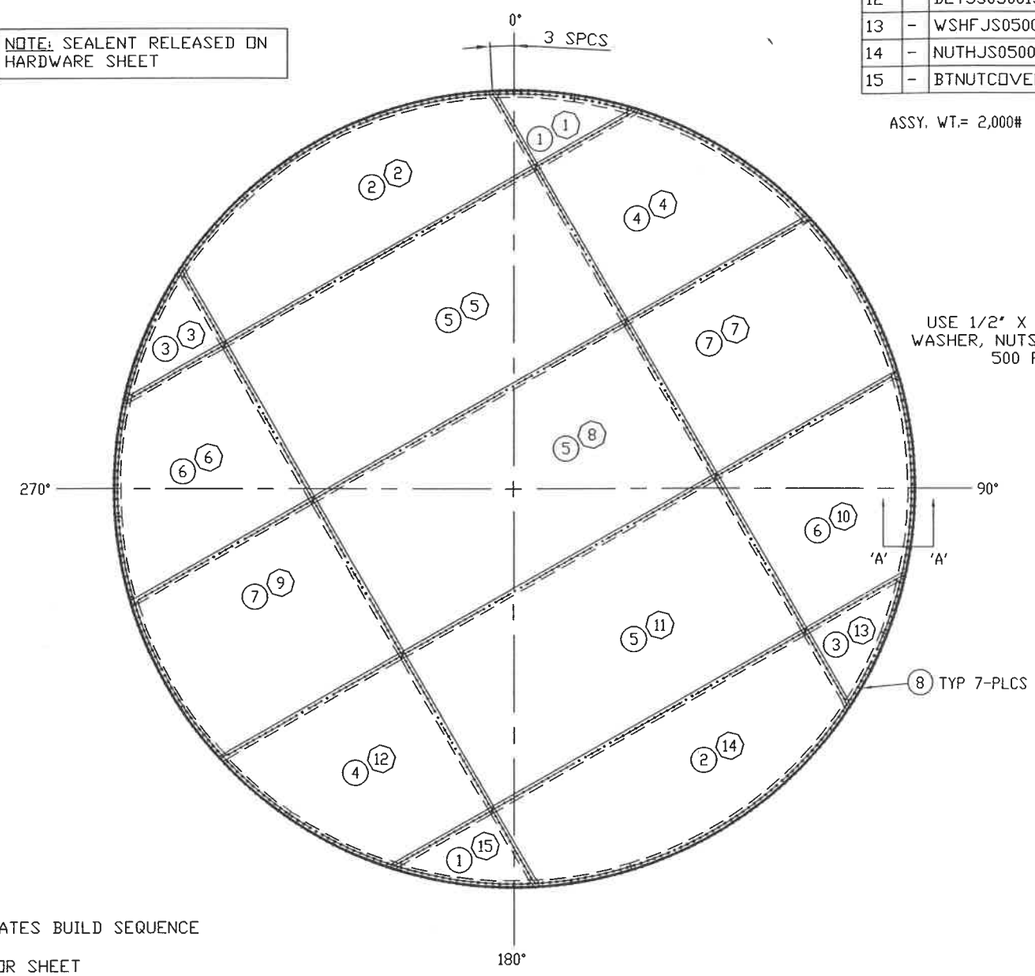

BOTTOM PLAN

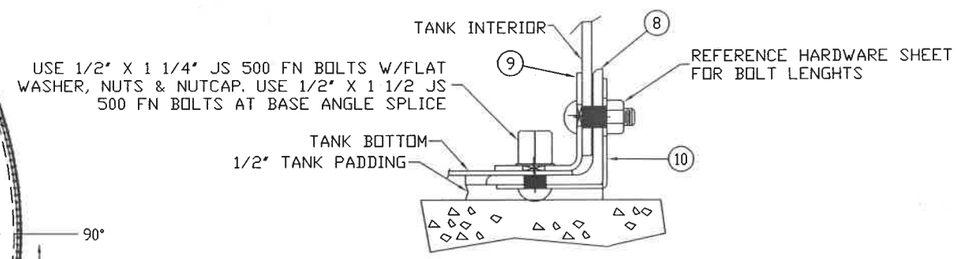

SECTION 'A'-'A'

◯ =INDICATES BUILD SEQUENCE

◯ = FLOOR SHEET

THE INFORMATION ON THIS DOCUMENT IS CONFIDENTIAL PROPERTY OF TANK MANUFACTURER AND/OR ITS AFFILIATES. ANY OTHER USE, RETENTION, DISSEMINATION, FORWARDING, PRINTING OR COPYING OF THIS DOCUMENT TO UNAUTHORIZED PARTIES IS STRICTLY PROHIBITED, WITHOUT THE EXPRESSED WRITTEN CONSENT OF TANK MANUFACTURER.

TANK CONNECTION AFFILIATE GROUP

REV	REVISION	DATE	BY	APP
E				
D				
C				
B				
A				

DRAWN BY:	DJC
DATE:	1/18/10
REVIEWED BY:	--
DATE:	---

FLOOR ASS'Y FOR 21'-6 7/16"Ø TANK

SCALE: NTS | DRAWING NO. FLOOR1255001

ITEM	D/S	PART NO.	QTY	DESCRIPTION	EST. WT.	PAINT
1	B	LSA005	1	58" TOP SECTION ASSEMBLY	156	Z
2	B	LSA006	1	58" MID SECTION ASSEMBLY	91	Z
3	B	LSA008	1	STANDARD RING LADDER ASSEMBLY	133	Z
4	-	BLTFJSC05001750	11	1/2" X 1 3/4" PC FN JS 500		N
5	B	LKDRASSY	1	LADDER LOCKABLE DOOR ASSY - AL	9	N

ASSEMBLY WEIGHT= 389 LBS

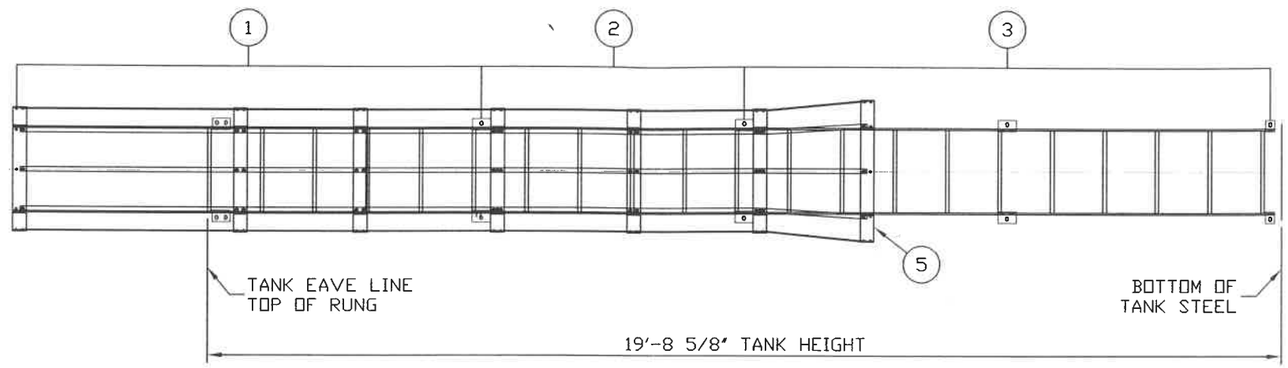

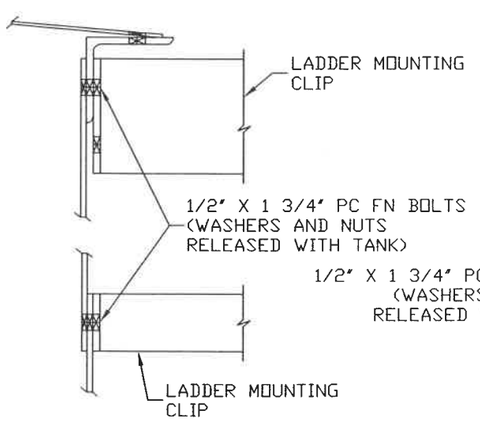

TOP & BOTTOM LADDER MOUNTING CLIP
ATTACHMENT TO SIDEWALL DETAIL

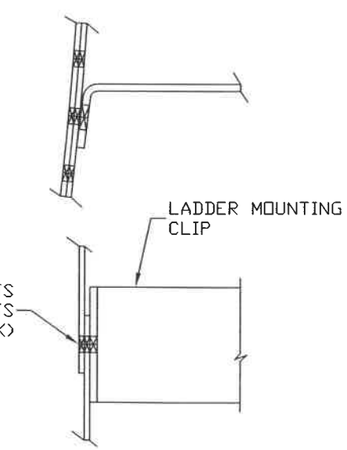

STANDARD LADDER MOUNTING CLIP
ATTACHMENT TO SIDEWALL DETAIL

ASSEMBLY NOTE:
INITIALLY ASSEMBLE UTILIZING LOOSE FIT CONNECTIONS. INSTALL AND ALIGN ALL PARTS BEFORE FULLY TIGHTENING HARDWARE.

MATERIALS OF CONSTRUCTION:
ALL MATERIALS ARE A1011 GR36 (A36) AND AS BELOW UNLESS NOTED OTHERWISE:
3/8PL X 2 1/2" STRINGERS
3/4" ROUND BAR RUNGS
3/16PL X 3" WIDE HOOPS
3/16PL X 1" CAGE BARS

LADDER IS OSHA COMPLIANT

LADDER IS HOT DIPPED GALVANIZED

FOR ADDITIONAL ASSEMBLY DETAILS REFERENCE DRAWINGS:
LSA005
LSA006
LSA007
LKDRASSY

BY ACCEPTING POSSESSION OF THIS DOCUMENT, RECIPIENT AGREES THAT ITS CONTENTS ARE CONFIDENTIAL, PROPRIETARY TRADE SECRETS OF THE TANK CONNECTION. NO PORTION OF THIS DOCUMENT MAY BE REPRODUCED, DISTRIBUTED, OR USED IN ANY MANNER WITHOUT WRITTEN PERMISSION FROM THE TANK CONNECTION.

TANK CONNECTION
AFFILIATE GROUP

REV	REVISION	DATE	BY	APP
E				
D				
C				
B				
A	UPDATED BOARDER	12/11/09	JA	DJC

DRAWN BY:	MM	19'-8 5/8" LADDER ASSEMBLY		
DATE:	4/23/08			
REVIEWED BY:	MB			
DATE:	5/12/08	SCALE: NTS	DRAWING NO.	EL01908

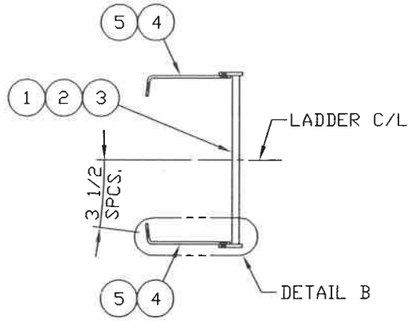

VIEW 'A'-'A'
NOT TO SCALE

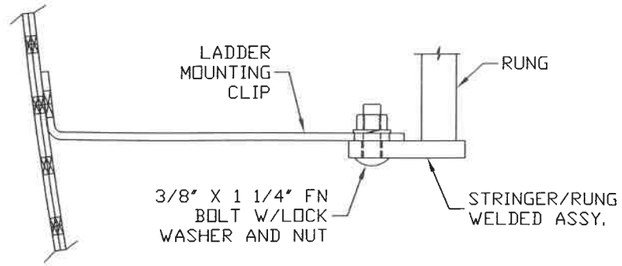

DETAIL B

ITEM	D/S	PART NO.	QTY	DESCRIPTION	EST. WT.	PAINT
1	B	712889022	1	LOWER STRINGER/RUNG ASSEMBLY	42	I
2	B	712889020	1	UPPER STRINGER/RUNG ASSEMBLY	44	I
3	B	712889021	1	MID STRINGER/RUNG ASSEMBLY	82	I
4	B	LCP4	6	LADDER MOUNTING CLIP	3	I
5	B	LCP5	4	LADDER MOUNTING CLIP	3	I
6	-	BLTFG03751250	21	3/8" x 1 1/4" FN BOLT HDG		
7	-	NUTHG0375	21	3/8" NUT HEX		
8	-	WSHLG0375	21	3/8" LOCK WASHER HDG		
9	-	BLTFJSC05001750	11	1/2" X 1 3/4" PC FN JS500 BOLT		
10	-	WSHFJ0500	11	1/2" FLAT WASHER JS500		
11	-	NUTHJ0500	11	1/2" HEX NUT JS500		

ASSY. WEIGHT= 198#

ASSEMBLY NOTE:
INITIALLY ASSEMBLE UTILIZING LOOSE FIT CONNECTIONS. INSTALL AND ALIGN ALL PARTS BEFORE FULLY TIGHTENING HARDWARE.

MATERIALS OF CONSTRUCTION:
MATERIALS ARE A1011 GR36 (A36)
3/8PL X 2 1/2" STRINGERS
3/4" ROUND BAR RUNGS

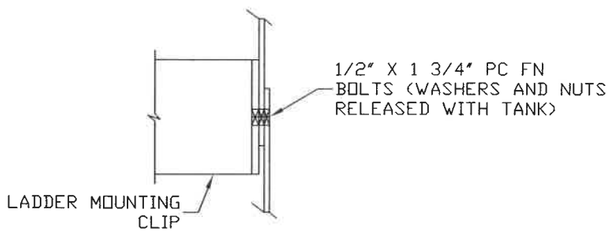

STANDARD LADDER MOUNTING CLIP
ATTACHMENT TO SIDEWALL DETAIL

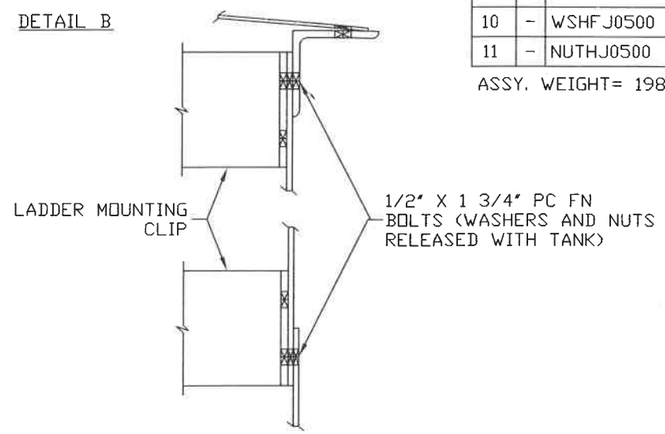

TOP & BOTTOM LADDER MOUNTING CLIP
ATTACHMENT TO SIDEWALL DETAIL

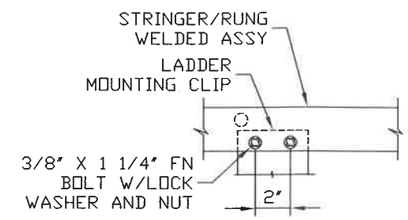

SIDE VIEW ASSEMBLY DETAIL

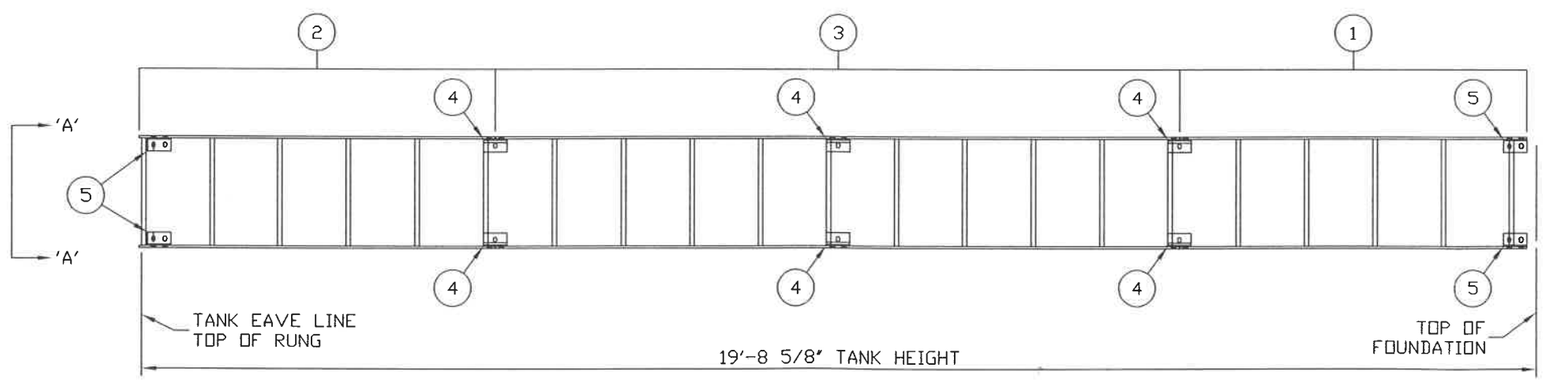

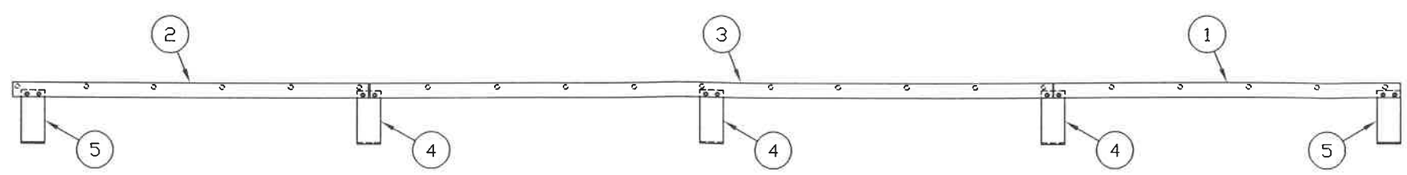

INSTALL ALL CLIPS ON
I.S. OF STRINGER

BY ACCEPTING POSSESSION OF THIS DOCUMENT, RECIPIENT AGREES THAT ITS CONTENTS ARE CONFIDENTIAL, PROPRIETARY TRADE SECRETS OF THE TANK CONNECTION. NO PORTION OF THIS DOCUMENT MAY BE REPRODUCED, DISTRIBUTED, OR USED IN ANY MANNER WITHOUT WRITTEN PERMISSION FROM THE TANK CONNECTION.

TANK CONNECTION
AFFILIATE GROUP

REV	REVISION	DATE	BY	APP
E				
D				
C				
B				
A				

DRAWN BY:	JA
DATE:	12/11/09
REVIEWED BY:	DJC
DATE:	12/14/09

19'-8 5/8" INT. LADDER ASSEMBLY

SCALE: NTS | DRAWING NO. IL01908P

ITEM	D/S	PART NO.	QTY	DESCRIPTION	EST. WT.	PAINT
1	B	053-096	4	HANDRAIL POST 2 1/2" X 2 1/2" X 1/4"	17	Z
2	B	GRC7009401	6	HANDRAIL CLIP 3/16PL	3	Z
3	A	TBC596	4	TOEBOARD 1/8PL X 4" X 61 1/4" O.A.L.	9	Z
4	B	GRP11621	4	HANDRAIL PIPE 1.66" O.D. X 0.072" WALL	12	N
5	–	UBTPG166	14	U-BOLT FOR 1 1/4" PIPE W/NUTS (GALV.)		N
6	–	WSHFG0375	28	3/8" FLAT WASHER GALV		N
7	–	BLTSQJS05001500	30	1/2" X 1 1/2" SQ HD BOLT JS500		N
8						
9						
10						
11	–	CCF158	8	PIPE CAP PLASTIC BLACK 1 5/8" O.D.		N
12	–	EDGECLIP	6	EDGE CLIP		N
13	B	70094025	2	HANDRAIL POST 2 1/2" X 2 1/2" X 1/4" X 104 9/16"	36	Z
14	B	GRC7009402	2	HANDRAIL CLIP 1/4PL	2	Z
15	–	BLTFJSC05001500	3	1/2" X 1 1/2" PC FN JS500 BOLT		N
16	–	WSHFJ0500	50	1/2" FLAT WASHER JS500		N
17	–	NUTHJ0500	50	1/2" HEX NUT JS500		N
18	–	BLTFJS05001500	15	1/2" X 1 1/2" FN JS500 BOLT		N
19	–	CHNZ0312530	2	CHAIN SAFETY 5/16" X 30" LG ZINC PLTD	5	N
20	–	MC3016T33	4	EYE BOLT 3/8"x3"LGx3/4"DIA EYE w/DBL NUTS		N
21	–	CHREPLNKZ031251500	2	CHAIN REPAIR LINK 1 1/2" ZINC PLTD		N
22	–	MC3933T18	2	SPRING SNAP 5/8" OPENING 7/16" DIA.		N

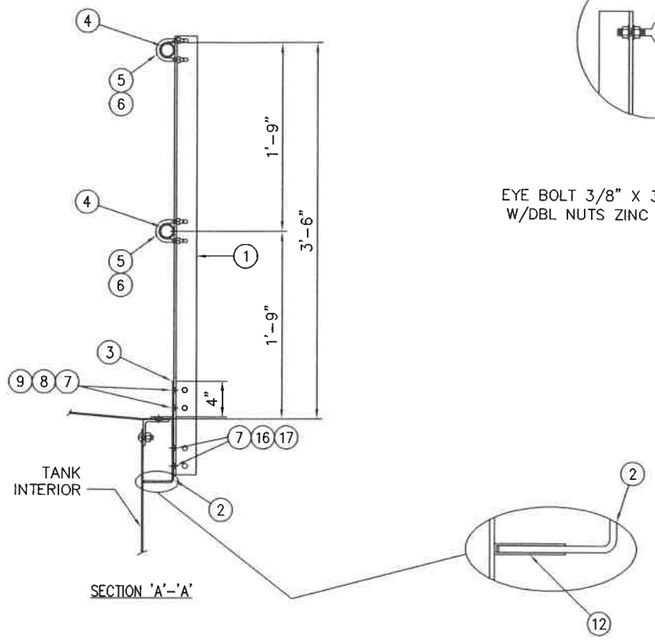

SECTION 'A'-'A'

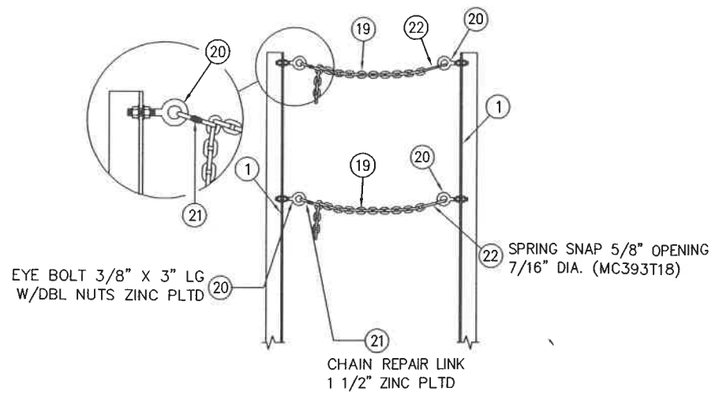

SAFETY CHAIN DETAIL AT LADDER OPENING

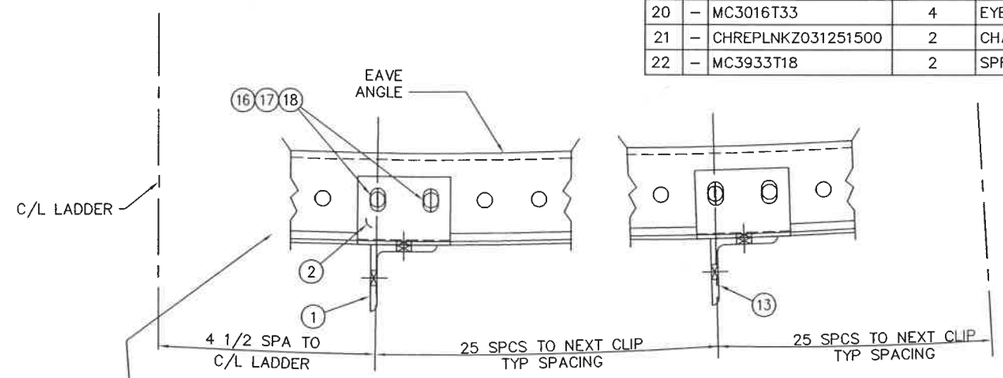

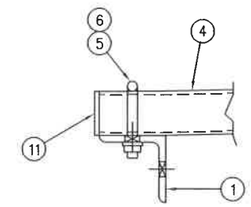

HANDRAIL TO POST DETAIL

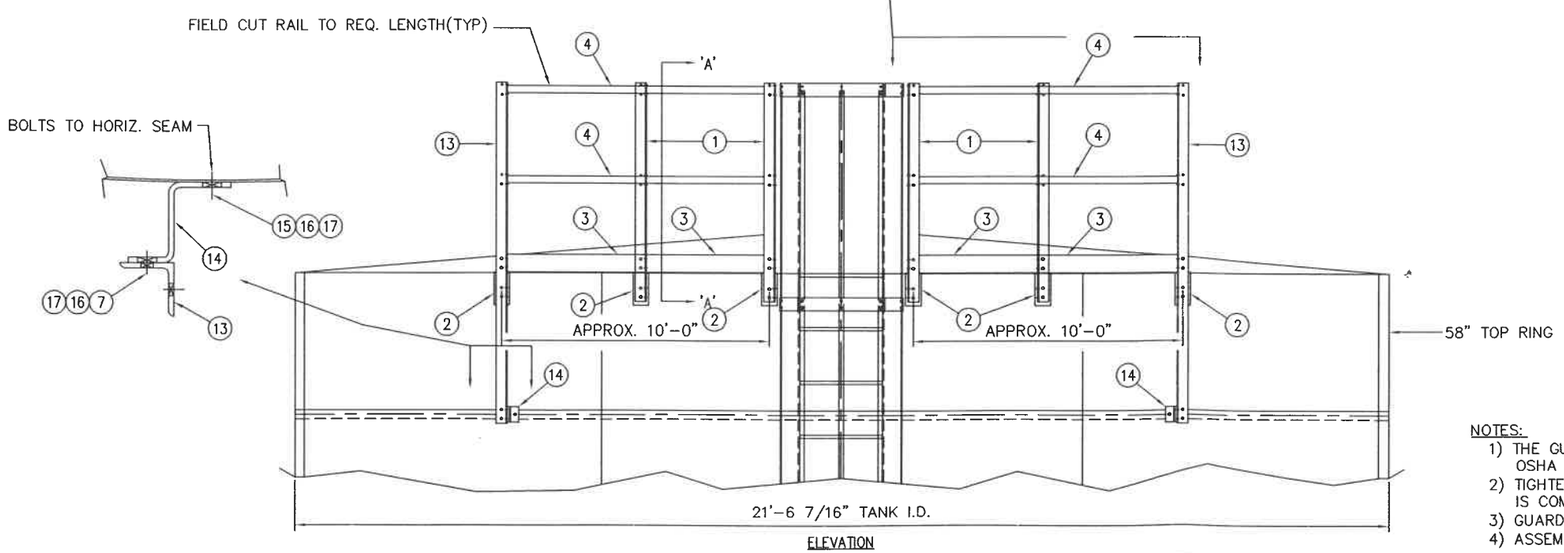

ELEVATION

NOTES:
1) THE GUARDRAIL SYSTEM IS IN COMPLIANCE WITH OSHA STANDARDS FOR THE GENERAL INDUSTRY.
2) TIGHTEN U-BOLTS AFTER ENTIRE GUARDRAIL IS COMPLETE.
3) GUARDRAIL ASSY IS GAVANIZED.
4) ASSEMBLY WT.=198#

THE INFORMATION ON THIS DOCUMENT IS CONFIDENTIAL PROPERTY OF TANK MANUFACTURER AND/OR ITS AFFILIATES. ANY OTHER USE, RETENTION, DISSEMINATION, FORWARDING, PRINTING OR COPYING OF THIS DOCUMENT TO UNAUTHORIZED PARTIES IS STRICTLY PROHIBITED, WITHOUT THE EXPRESSED WRITTEN CONSENT OF TANK MANUFACTURER.

TANK CONNECTION AFFILIATE GROUP

REV	REVISION	DATE	BY	APP
E				
D				
C				
B	ADDED SAFETY CHAIN	1/18/10	DJC	JA
A	GENERAL REVISION	9/24/08	TG	JA

DRAWN BY:	BB
DATE:	7/3/08
REVIEWED BY:	DJC
DATE:	7/3/08

10' PARTIAL GUARDRAIL ASS'Y FOR 21'-6 7/16"ø TANK 58" TOP RING

SCALE: NTS | DRAWING NO. GRDP10A2154

ERSPECTIVE

REVISED TICKET BOOTH

A0.3

CALIFORNIA SHAKESPEARE THEATER

701 HEINZ AVENUE, BERKELEY, CALIFORNIA 94710

100% DESIGN DEVELOPMENT | 12 MAY 2008

LEDDY MAYTUM STACY ARCHITECTS
677 HARRISON STREET
SAN FRANCISCO CA 94107
T 415 495 1700
F 415 495 1717

FEB. 3, 2010

4 / A4.2 TICKET BOOTH - SOUTH ELEVATION

EXTERIOR ELEVATION

1/8"=1'-0"

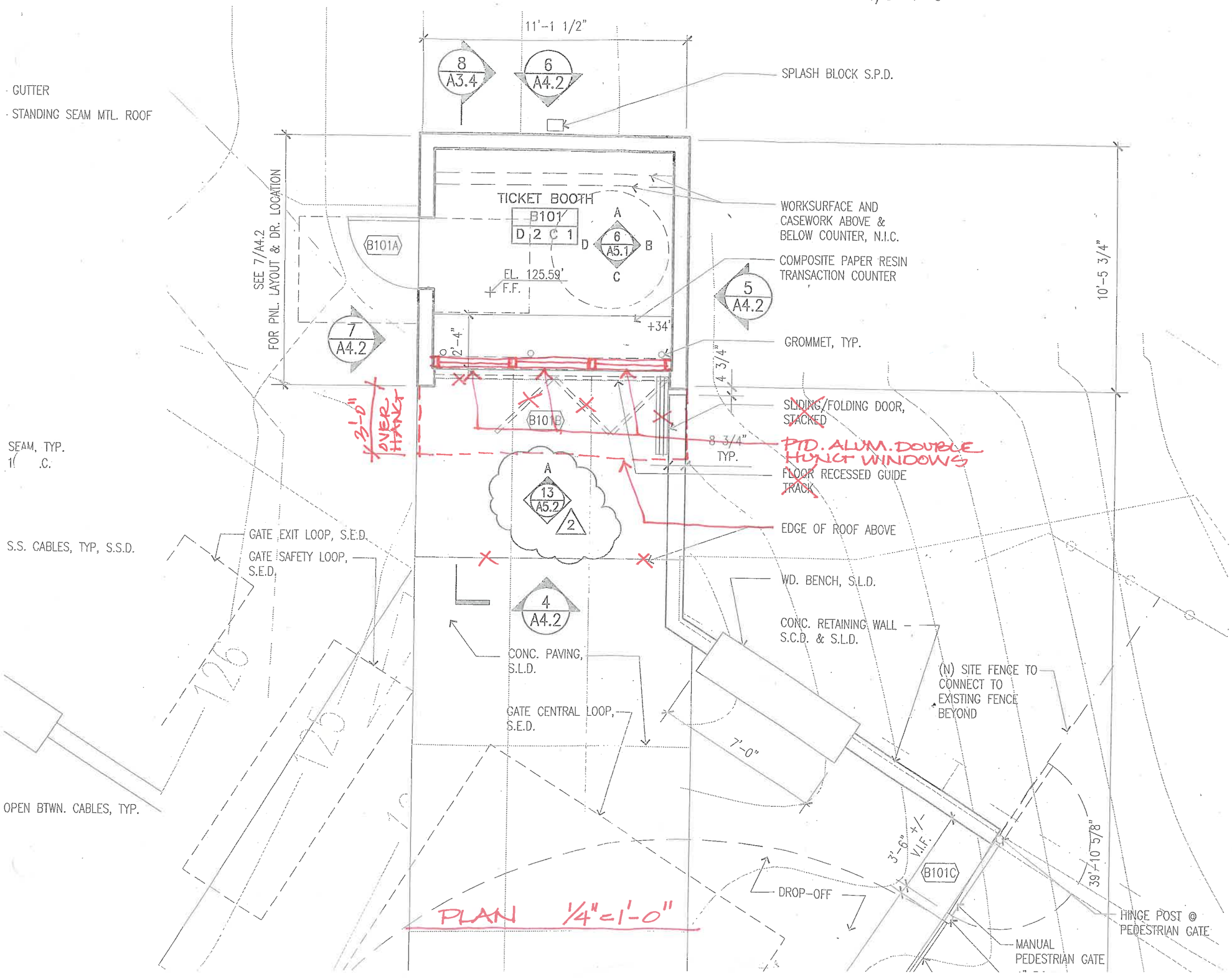

PLAN 1/4"=1'-0"

SHAKESPEARE THEATER CALIFORNIA

ORINDA, CALIFORNIA

No	REVISION	DATE
1	BID SET	10.23.08
2	BID ADDENDUM #1	11.10.08

REVISED TICKET BOOTH

FEB. 3. 2010

1

"=1'-0" 5 A4.2 TICKET BOOTH - WEST ELEVATION
EXTERIOR ELEVATION

MANUAL PEDESTRIAN GATE

1/8"=1'-0" 4 A4.2 TICKET BOOTH - SO
EXTERIOR ELEVATION

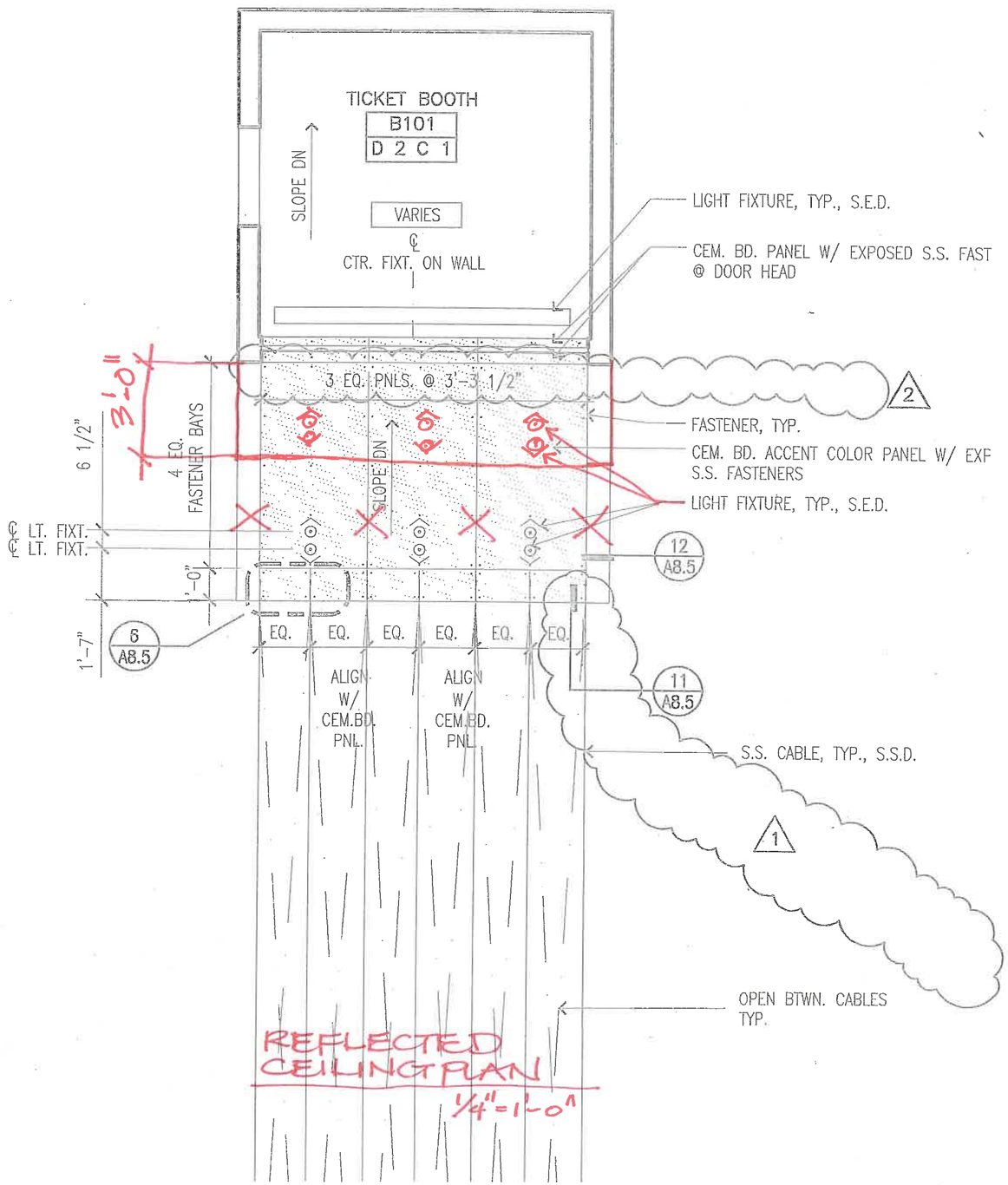

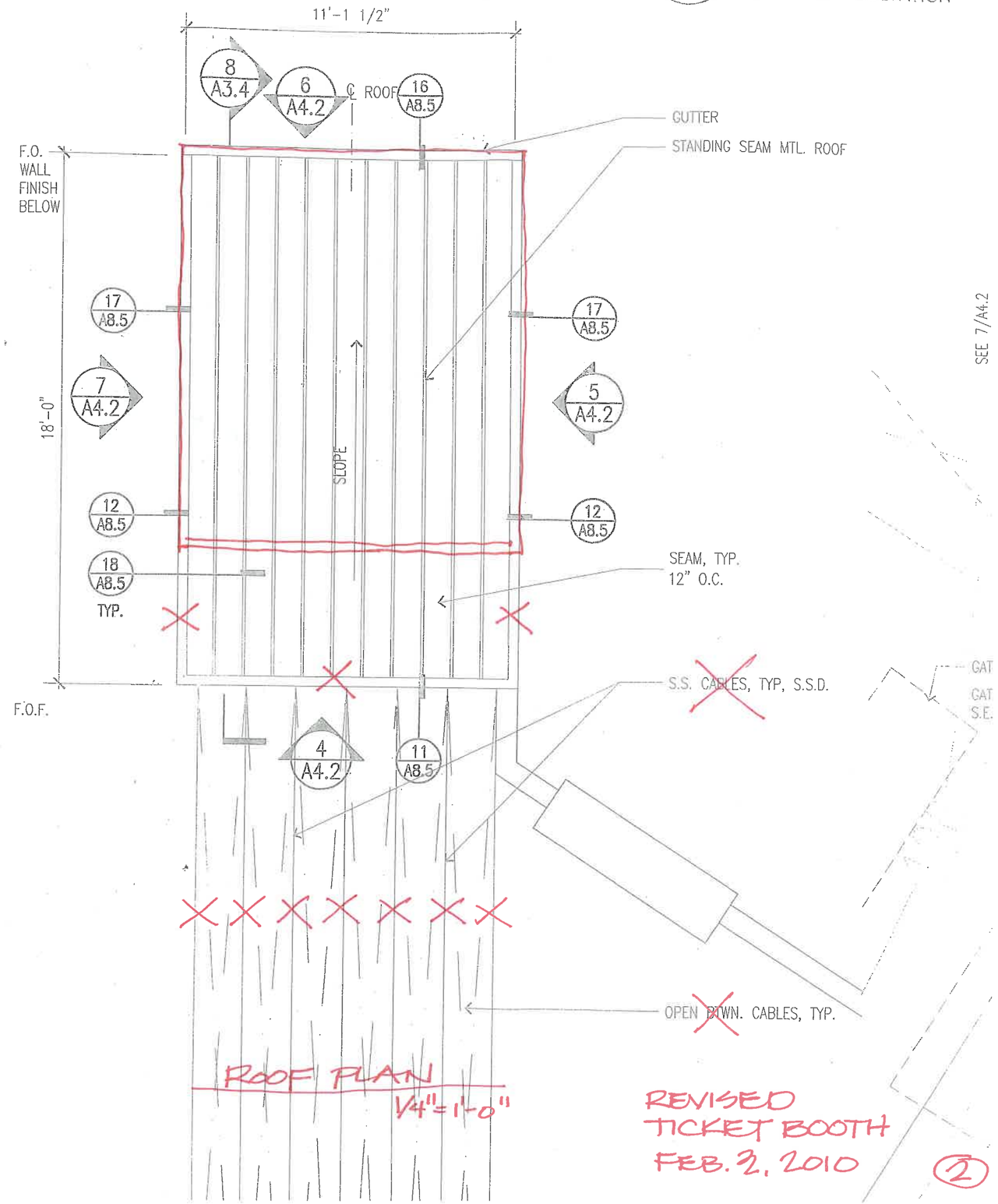

REVISED TICKET BOOTH FEB. 2, 2010

2

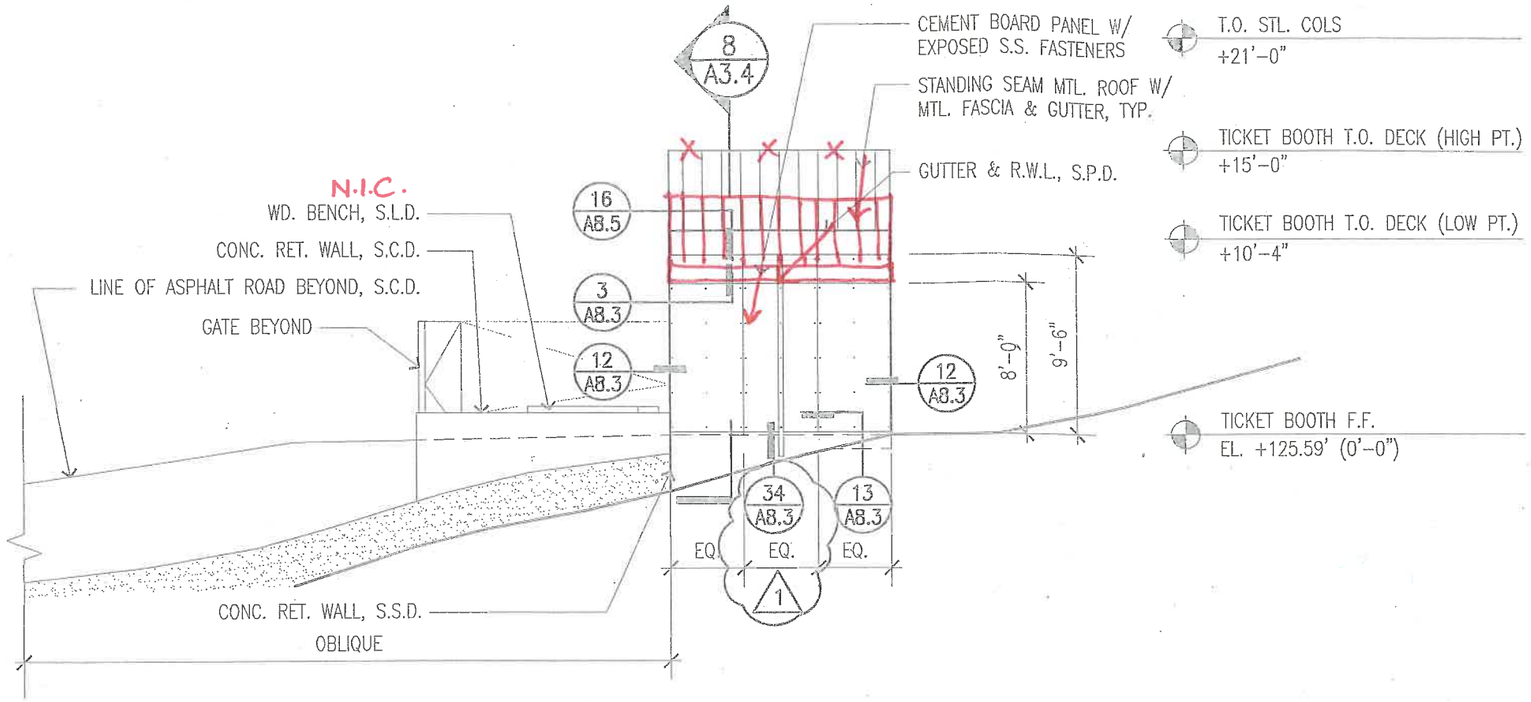

6
A4.2

TICKET BOOTH - NORTH ELEVATION

EXTERIOR ELEVATION

1/8"=1'-0"

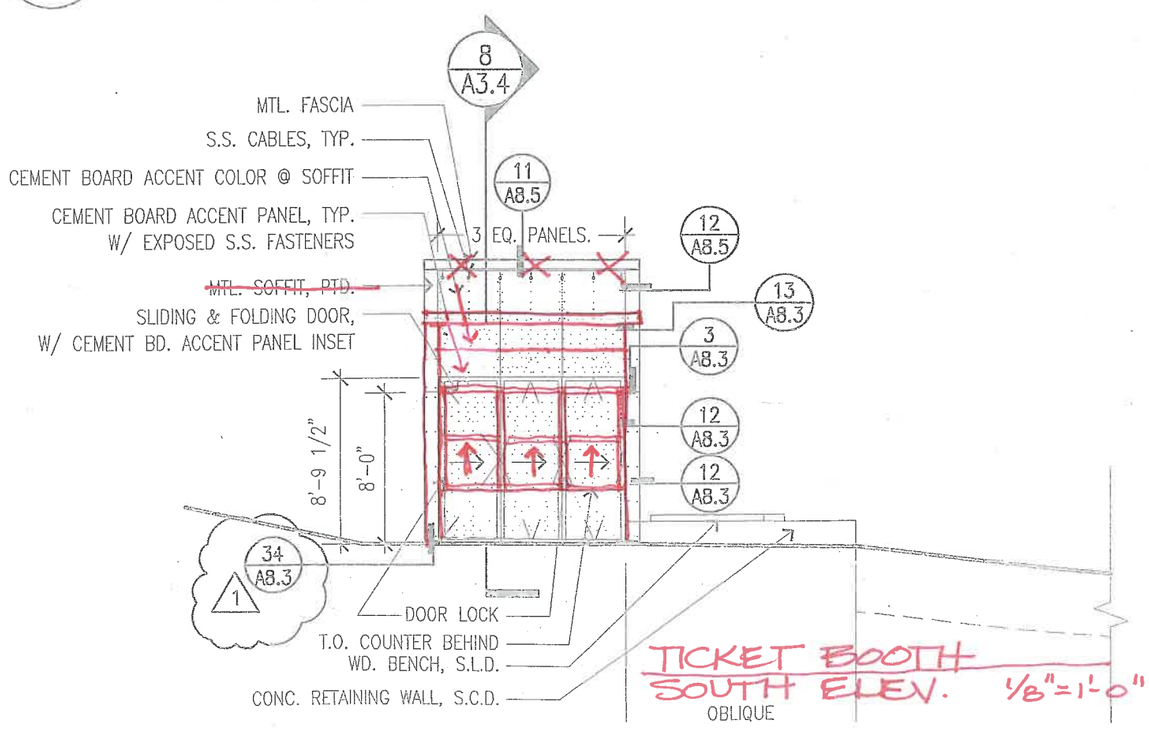

TICKET BOOTH
SOUTH ELEV. 1/8"=1'-0"

FINISH KEY

A 1 A 1
FLOOR
BASE
WALL
CEILING

FLOOR

A. CONCRETE, SEALED
B. CERAMIC TILE
C. CARPET TILE
D. RESILIENT FLOORING
E. WOOD DECKING

BASE

1. WOOD BASE, PTD.
2. RUBBER BASE (NO BASE @ EXT. CONC./P.I.S.E. WALL EXPOSED ON INT.)
3. NOT USED
4. CERAMIC TILE COVED BASE
5. CONCRETE BASE

WALL

A. CONCRETE
B. CONCRETE, PTD.
C. GYP. BD., PTD.
D. CERAMIC TILE
E. CEMENT BOARD PANEL
F. MULTIPLE FINISHES, SEE ELEVATIONS
G. MULTIPLE FINISHES, CONC./P.I.S.E. WHERE EXTERIOR WALL EXPOSED ON INT., GYP. BD. PTD. REMAINING WALLS
H. FRP WALL PANELS

CEILING

1. GYP. BD., PAINT
2. GYP. BD., PAINT, ACCENT COLOR
3. GYP. BD., PAINT, ACCENT COLOR IN VESTIBULE ONLY
4. EXPOSED TO STRUCTURE ABOVE
5. MULTIPLE FINISHES, SEE RCP

GENERAL RCP NOTES:

1. CEILING HEIGHTS NOTED ARE DIMENSIONED FROM FINISH FLOOR OF ROOM

ARCHITECTS
LMS
LEDDY MAYTUM STAC
677 HARRISON STREET
SAN FRANCISCO, CA 94
T 415 495 1700
F 415 495 1717
W www.lmsarch.com

STAMP

LICENSED ARCHITECT
MARSHA MAYTUM
NO. C 12450
REN 7/2009
STATE OF CALIFORNIA

CONSULTAN

REVISED
TICKET BOOTH
FEB. 23, 2010 (3)

PROJECT
CALSHA

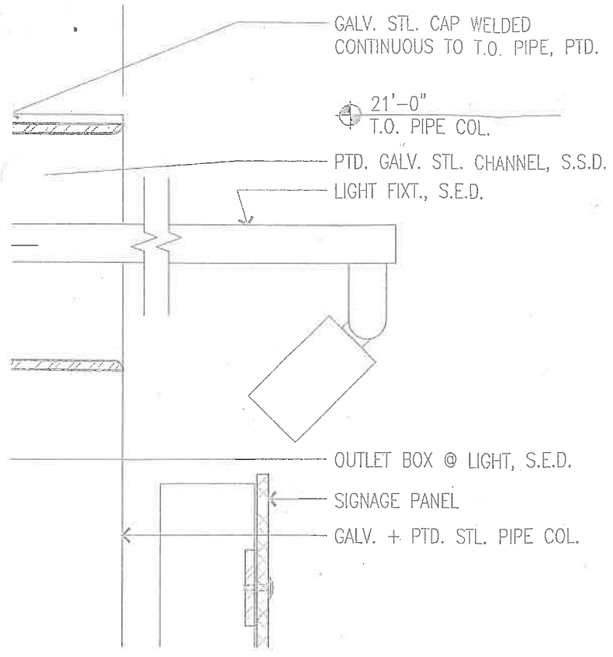

GNAGE & LIGHT @ STL. BEAM

KET BOOTH 3"=1'-0"

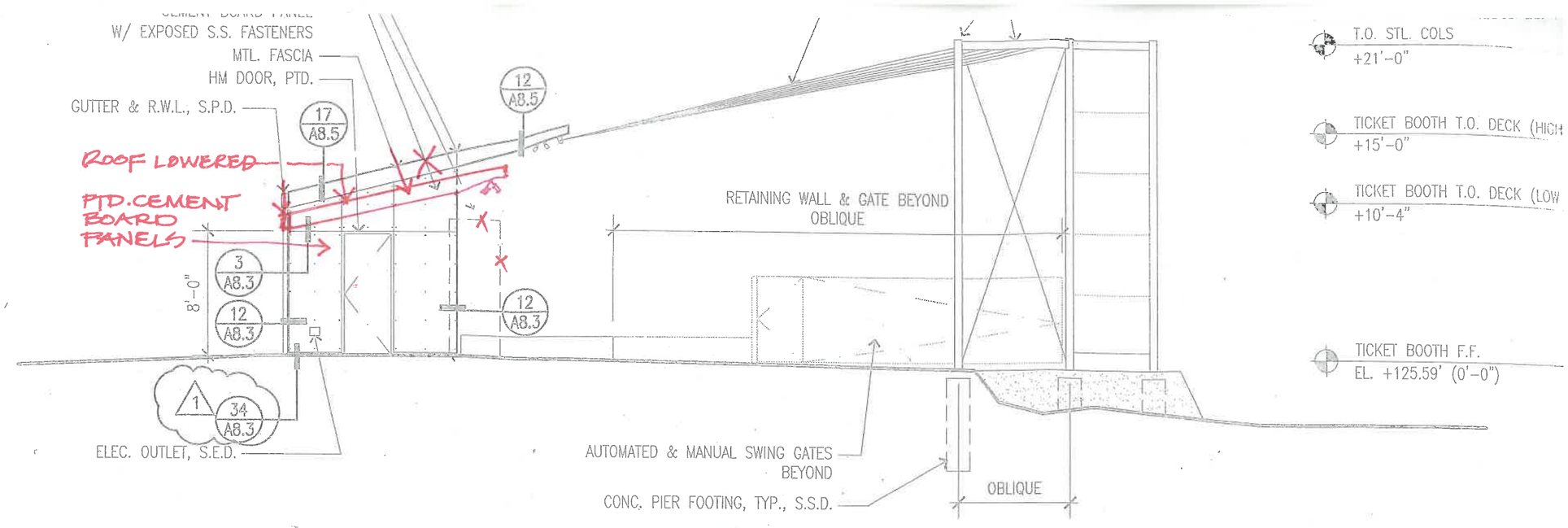

7 / A4.2 TICKET BOOTH - EAST ELEVATION

EXTERIOR ELEVATION 1/8"=1'-0"

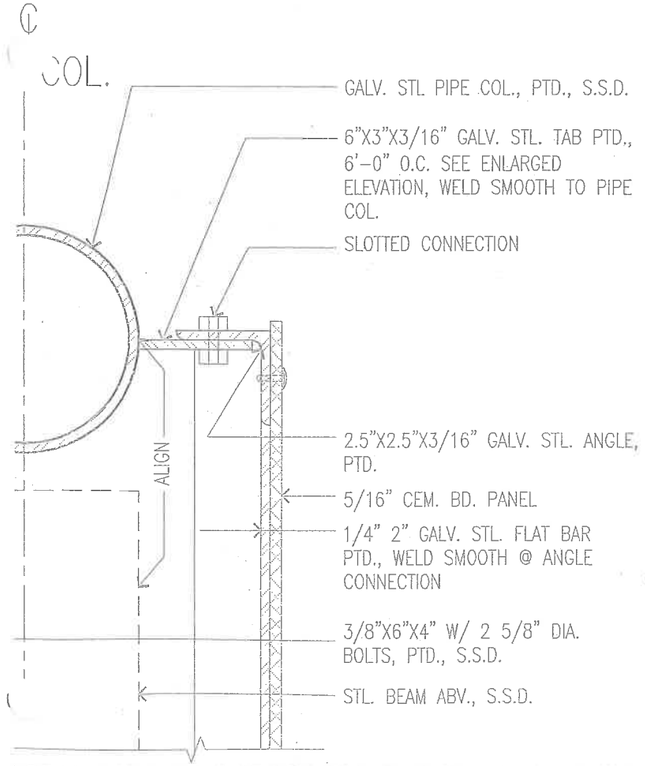

IGNAGE CONNECTION @ STL. COLUMN

CKET BOOTH 3"=1'-0"

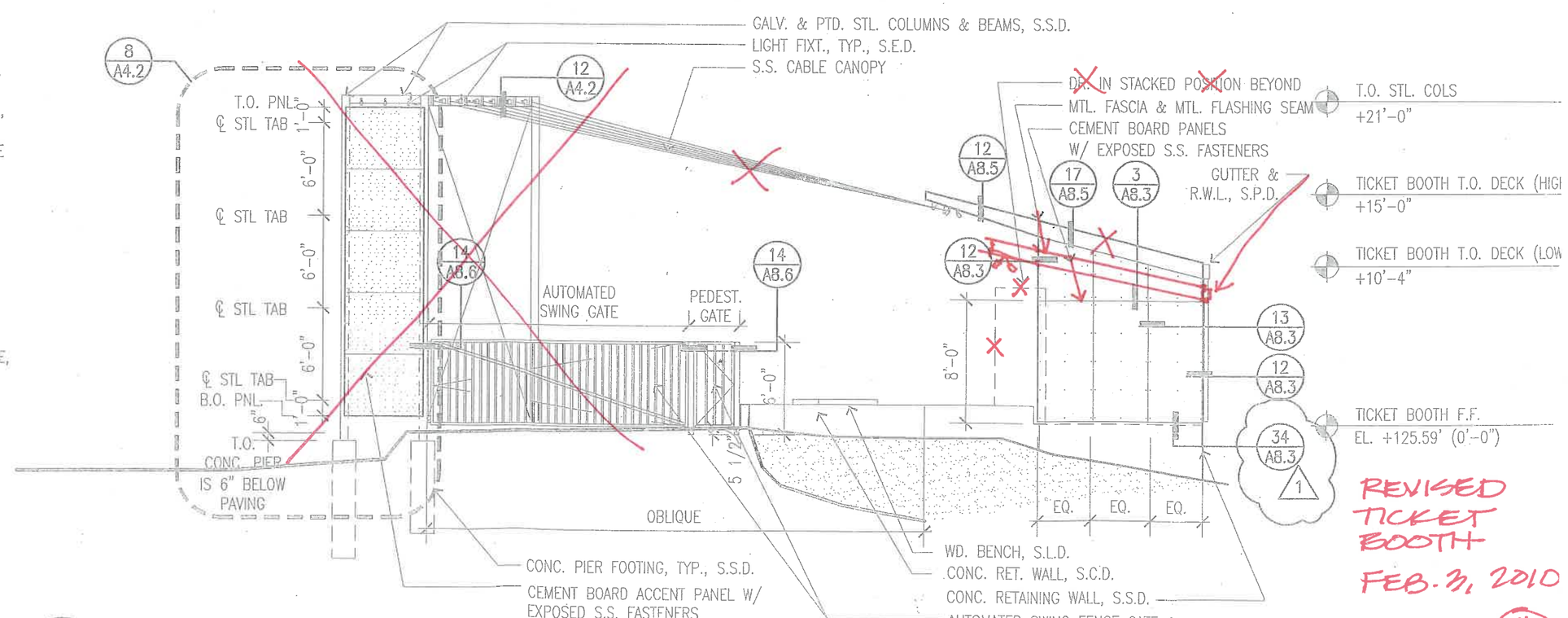

REVISED TICKET BOOTH FEB. 3, 2010

4

5 / A4.2 TICKET BOOTH - WEST ELEVATION

EXTERIOR ELEVATION 1/8"=1'-0"

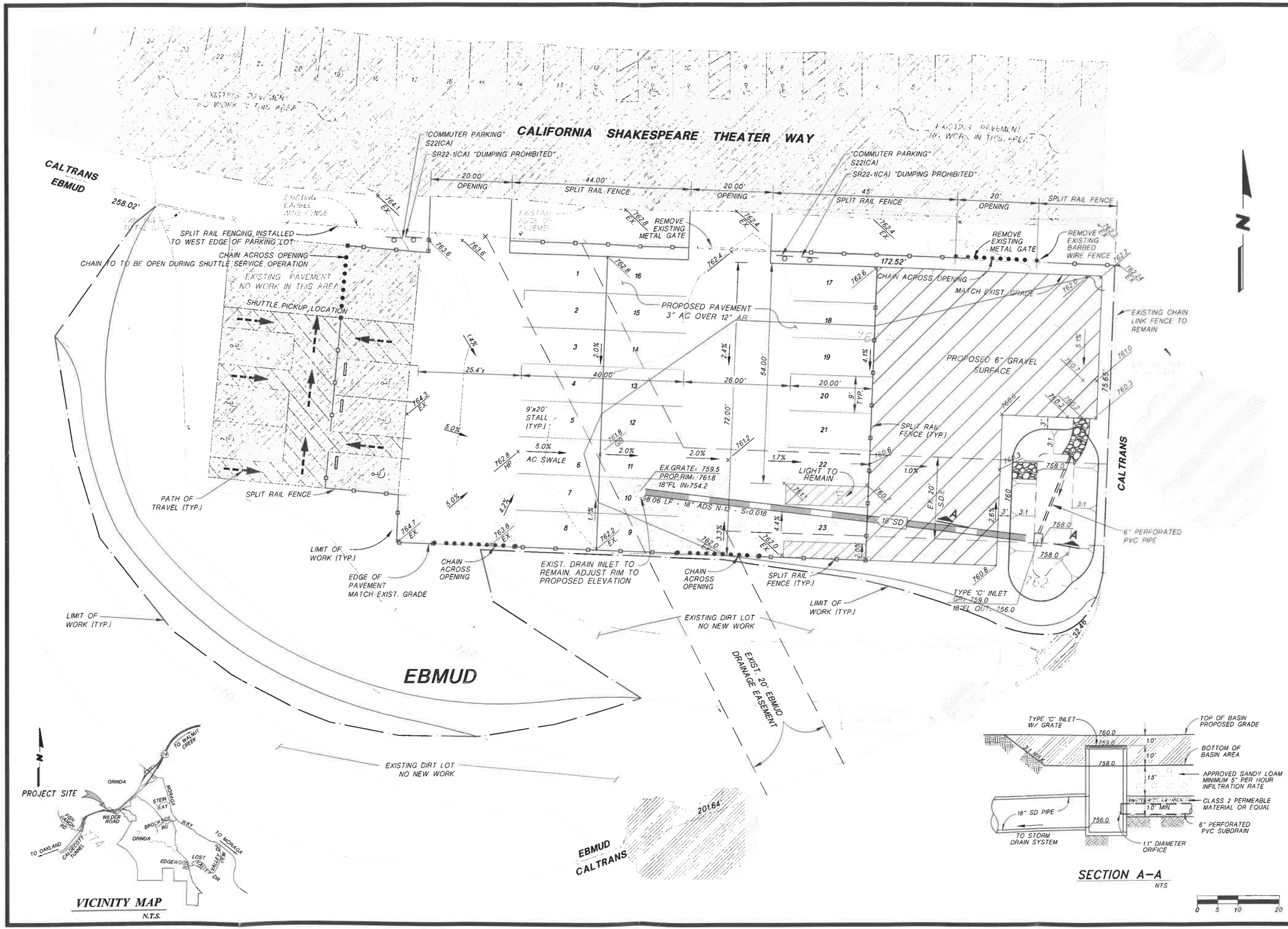

REVISIONS			
NO.	BY	DATE	

CAL SHAKE PARKING LOT
APN 265-160-017
GRADING & DRAINAGE PLAN

CITY OF ORINDA, CALIFORNIA

P/A Design Resources, Inc.
Planning ■ Engineering ■ Surveying
3021 Citrus Circle, Suite 150
Walnut Creek, California 94598-2635
TEL (925) 210-9300

DATE: 04/03/2013	
SCALE	HORIZ. 1"=10'
	VERT.
DESIGN:	
CHECKED:	
SHEET	2
OF 3 SHEETS	
PROJ. NO. 20021-20	

P:\Drawings\20021-20-Montanera\Park and Ride\EBMUD Parking\CAL SHAKE Rev.Parking.dwg, 12/4/2013 7:26:30 AM, Station M, 1:1, P/A Design Resources, Inc.

CALIFORNIA SHAKESPEARE THEATER WAY

CALTRANS
EBMUD

"COMMUTER PARKING" S22(CA)
SR22-1(CA) "DUMPING PROHIBITED"

20.00' OPENING | 44.00' SPLIT RAIL FENCE | 20.00' OPENING | 45' SPLIT RAIL FENCE | 20' OPENING | SPLIT RAIL FENCE

EXISTING PAVEMENT NO WORK IN THIS AREA

SPLIT RAIL FENCING INSTALLED TO WEST EDGE OF PARKING LOT
CHAIN ACROSS OPENING
CHAIN TO TO BE OPEN DURING SHUTTLE SERVICE OPERATION

SHUTTLE PICKUP LOCATION

REMOVE EXISTING METAL GATE

REMOVE EXISTING BARBED WIRE FENCE

172.52'

CHAIN ACROSS OPENING

MATCH EXIST. GRADE

762.00

EXISTING CHAIN LINK FENCE TO REMAIN

PROPOSED PAVEMENT 3" AC OVER 12" AB

PROPOSED 6" GRAVEL SURFACE

25.4'±

40.00'

26.00'

54.00'

20.00'

72.00'

9'x20' STALL (TYP.)

5.0% AC SWALE

EX.GRATE= 759.5
PROP.RIM= 761.8
18"FL IN=753.2

98.06 LF - 18" ADS N-12 - S=0.018

18" SD

LIGHT TO REMAIN

SPLIT RAIL FENCE (TYP.)

EX. 20' S.D.E.

CALTRANS

6" PERFORATED PVC PIPE

PATH OF TRAVEL (TYP.)

SPLIT RAIL FENCE

LIMIT OF WORK (TYP.)

EDGE OF PAVEMENT MATCH EXIST. GRADE

CHAIN ACROSS OPENING

EXIST. DRAIN INLET TO REMAIN. REMOVE EX. GRATE CONSTRUCT MANHOLE PER DETAIL SHEET 3

CHAIN ACROSS OPENING

SPLIT RAIL FENCE (TYP.)

TYPE 'C' INLET
GR= 759.0
18"FL OUT= 755.0

PLACE ROCK

LIMIT OF WORK (TYP.)

LIMIT OF WORK (TYP.)

EXISTING DIRT LOT NO NEW WORK

EXIST. 20' EBMUD DRAINAGE EASEMENT

EBMUD

EXISTING DIRT LOT NO NEW WORK

201.64'

EBMUD
CALTRANS

N

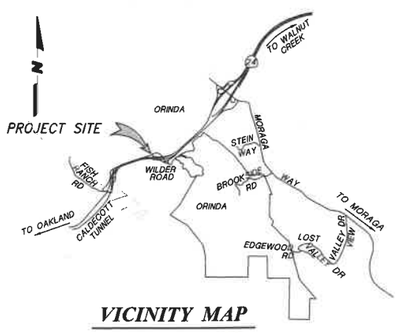

VICINITY MAP
N.T.S.

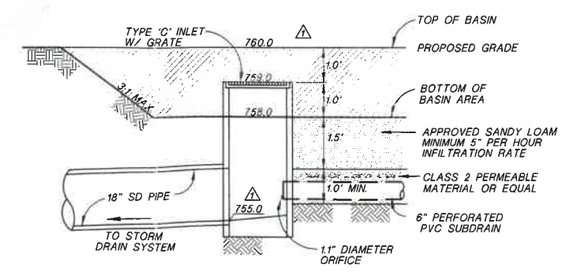

SECTION A-A
NTS

0 5 10 20

NO	BY	DATE	REVISIONS
3	MW	05-14-14	AS-BUILT REVISIONS
2	MW	04-24-14	REVISE FL ELEVATION
1	MW	04-21-14	REVISE SECTION, TIE TO EX. DI

CAL SHAKE PARKING LOT
APN 265-160-017
GRADING & DRAINAGE PLAN

CITY OF ORINDA, CALIFORNIA

P/A Design Resources, Inc.
Planning ▪ Engineering ▪ Surveying
3021 Citrus Circle, Suite 150
Walnut Creek, California 94598-2635
TEL (925) 210-9300

DATE: 04/03/2013
SCALE: HORIZ. 1"=10' VERT.
DESIGN:
CHECKED:
SHEET 2 OF 3 SHEETS
PROJ. NO. 20021-20

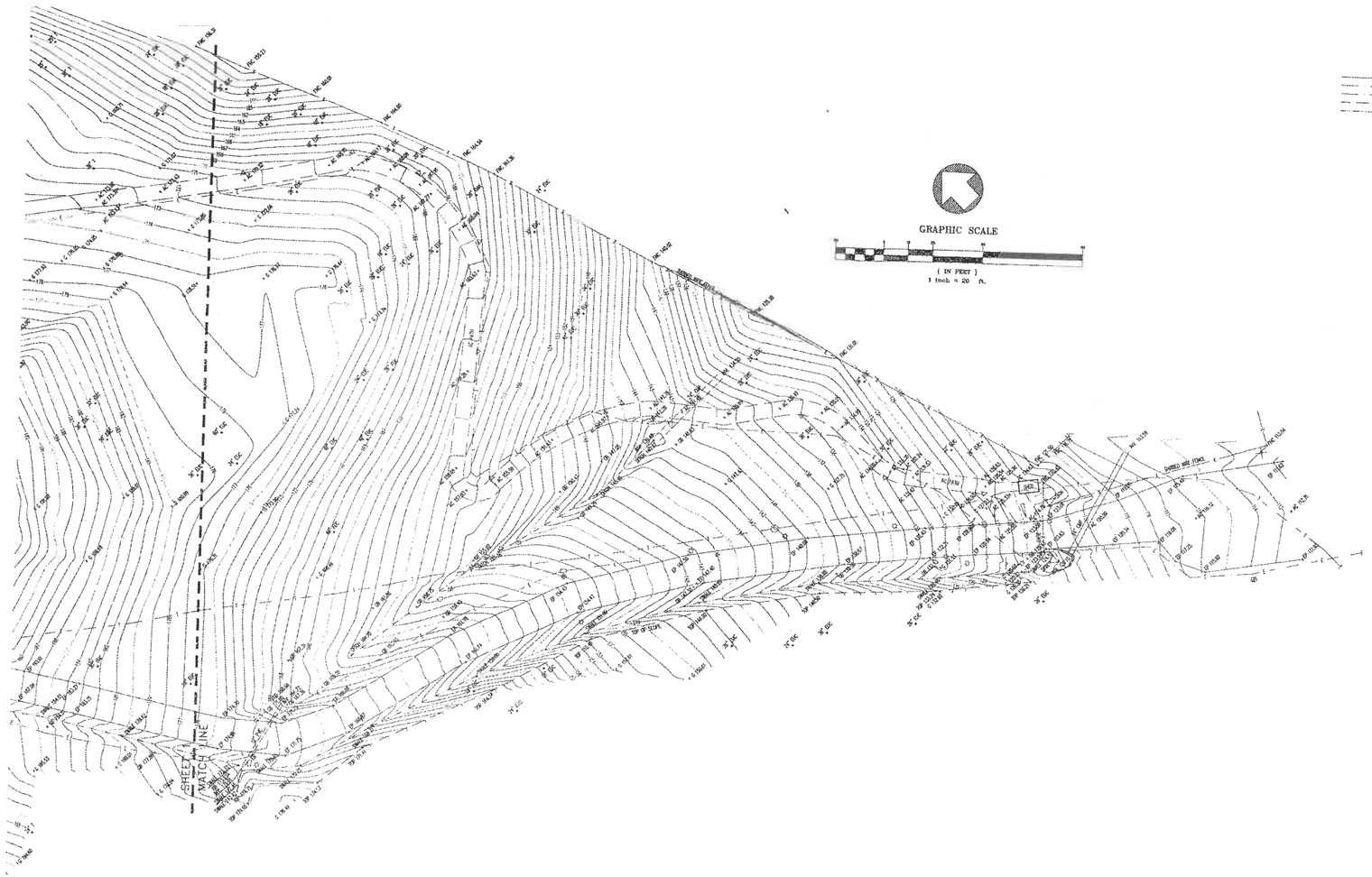

LEGEND:

X	FENCE LINE
E	ELECTRIC LINE
T	TELEPHONE LINE
SS	SANITARY SEWER LINES
W	WATER LINE
	ELECTROLIER
	FIRE HYDRANT
	SIGN
	SANITARY SEWER MANHOLE
	SITE BENCHMARK
[#]	QUANTITY
AC	ASPHALT
BW	BOTTOM OF WALL
CB	CATCH BASIN
CO	CLEANOUT
COL	COLUMN
CONC	CONCRETE
CMP	CORRUGATED METAL PIPE
DF	DRINKING FOUNTAIN
DI	DROP INLET
EB	ELECTRIC BOX
EP	EDGE OF PAVEMENT
EUC	EUCALYPTUS
EV	ELECTRIC VAULT
FNC	FENCE
G	GROUND
GP	GUARD POST
GR	GRATE ELEVATION
HB	HOSE BIB
INV	INVERT ELEVATION
LB	LIGHT BASE WITH NO LIGHT
PB	TELEPHONE BOOTH
RET	RETAINING
RIM	RIM ELEVATION
RW	REDWOOD
SD	STORM DRAIN
(TYP)	TYPICAL
T	TREE
TB	TELEPHONE BOX
TW	TOP OF WALL
UB	UTILITY BOX
W/	WITH
WV	WATER VALVE
YL	YARD LIGHT

ARCHITECTS

LMSA
LEDDY MAYTUM STACY ARCHITECTS
677 HARRISON STREET
SAN FRANCISCO, CA 94107
T 415 495 1700
F 415 495 1717
W www.lmsarch.com

STAMP

REGISTERED PROFESSIONAL ENGINEER
DANIEL G. SCHAEFER
No. 51158
EXP. 09/30/09
CIVIL
STATE OF CALIFORNIA
08/19/2008

CONSULTANTS

BKF
ENGINEERS / SURVEYORS / PLANNERS
2737 NORTH MAIN STREET
SUITE 200
WALNUT CREEK, CA 94596
925-940-2200
925-940-2299 (FAX)

PROJECT

CAL SHAKES
CALIFORNIA SHAKESPEARE THEATER

CALIFORNIA SHAKESPEARE THEATER
ORINDA, CALIFORNIA

No	REVISION	DATE

DATE:	22 AUGUST 2008
JOB No:	0614
PHASE:	CONSTRUCTION DOCUMENTS
ISSUED FOR:	100% PRINT
PERMIT No:	
SCALE:	1"=20'

SHEET TITLE

EXISTING CONDITIONS

SHEET No

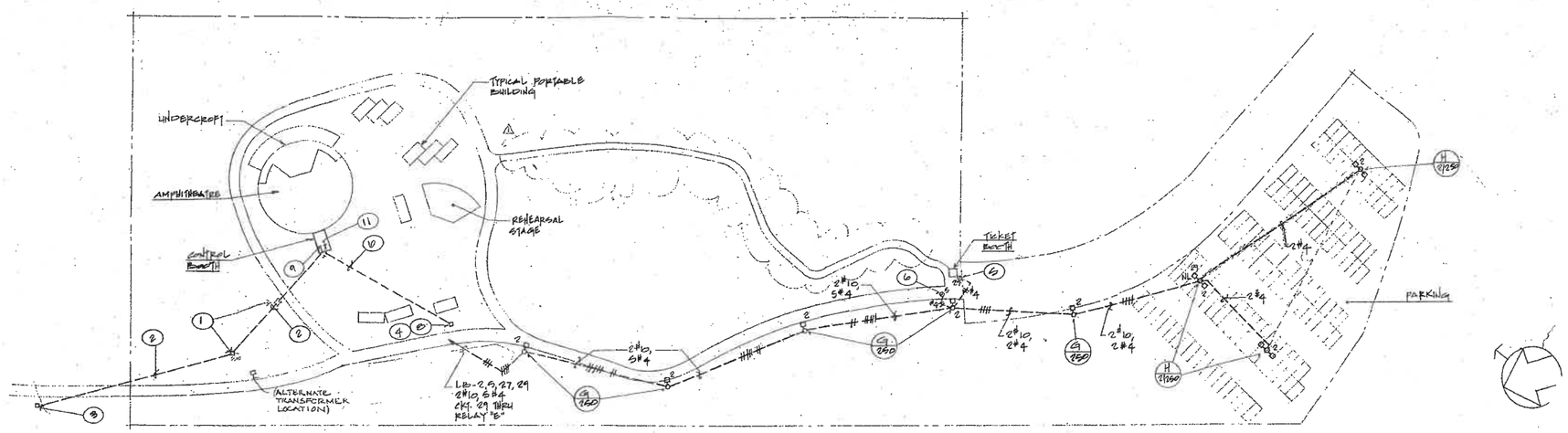

SITE PLAN

SCALE: 1"=50'-0"

1 / E1

SHEET NOTES

1. PULL BOX (SEE 1/E2)
2. TELEPHONE SERVICE: 2"C
3. EXISTING TELEPHONE PULL BOX
4. TRANSFORMER PAD (SEE 1/E2)
5. PROVIDE 1/2" J-BOX ADJACENT TO FUTURE TICKET BOOTH
6. INSTALL (3) 1/2" OUTLETS ON ENTRANCE ARCH FOR FUTURE LIGHTS. VERIFY EXACT LOCATION WITH ARCH.
7. NOT USED
8. UNDERGROUND SERVICE: 12KV/S
9. MAIN SWITCHBOARD (SEE E2)
10. SECONDARY SERVICE (SEE 1/E2)
11. MAIN TELEPHONE TERMINAL BOARD (SEE 1/E2)

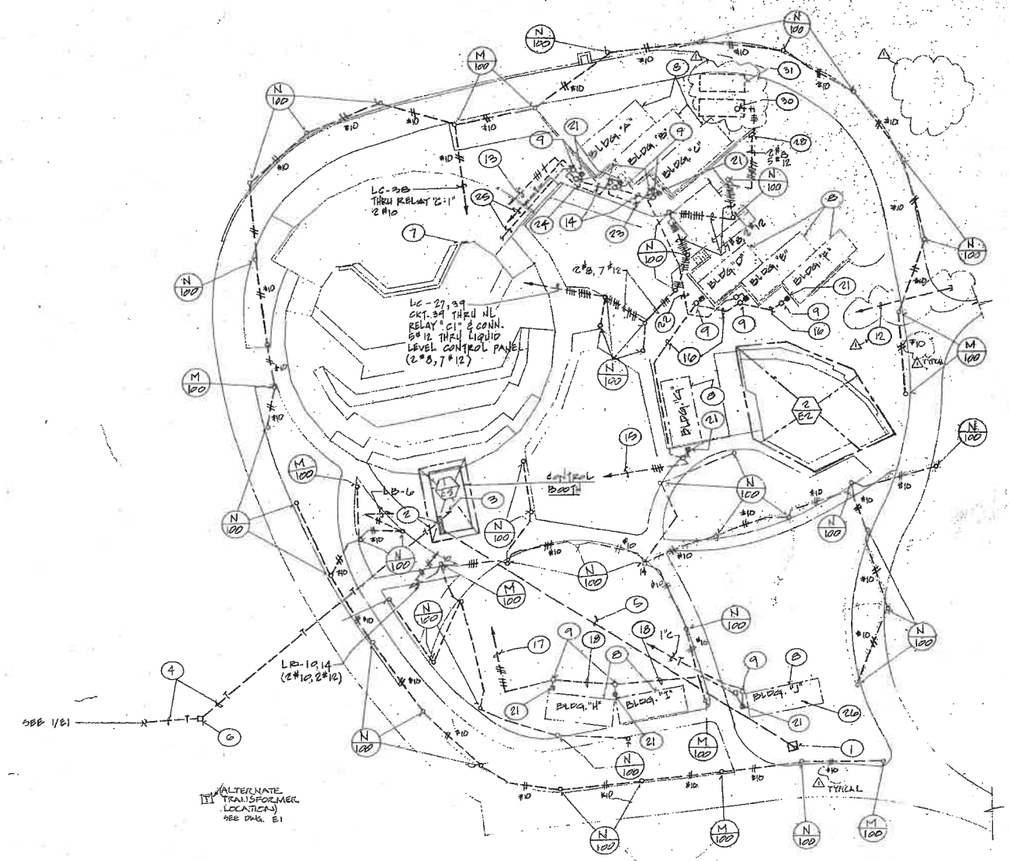

AMPHITHEATRE AREA

SCALE: 1"=20'-0"

1 E2

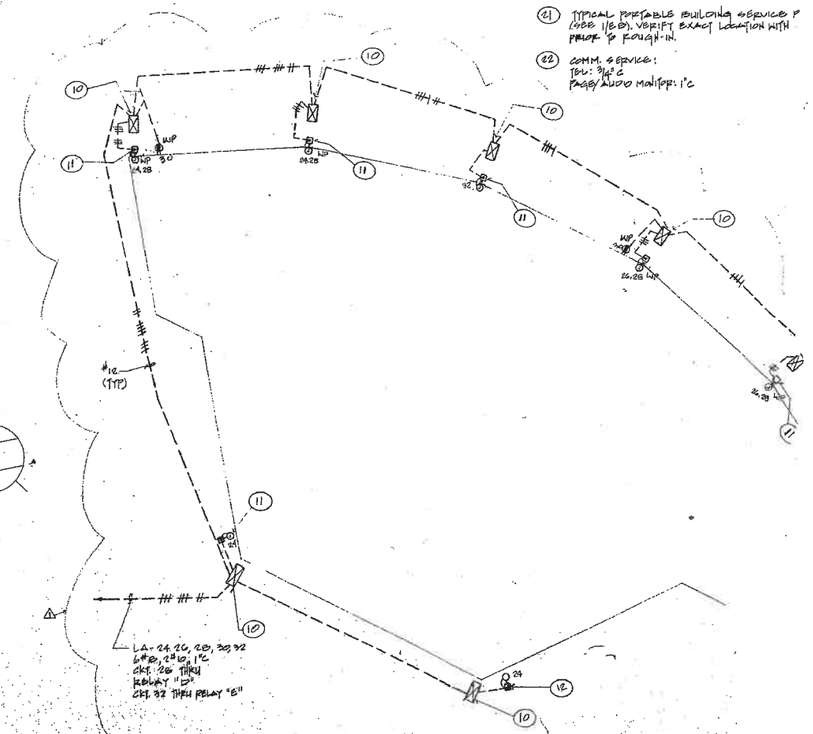

REHEARSAL STAGE PLAN

SCALE: 1/4"=1'-0"

2 E2

SHEET NOTES

1. TRANSFORMER FOR UTILITY CO. TRANSFORMER (SEE DETAIL 4/E7)
2. MAIN SWITCHBOARD
3. MAIN TELEPHONE TERMINAL BOARD
4. TELEPHONE SERVICE: 2-2"C
5. SECONDARY SERVICE: 3-5"C. (RIGID SCH. 40 CABLES BY PG&E); CONDUIT OWNER-MAIN
6. PULL BOX: CHRISTY No. N-36 WITH T-71 LID PER PAC BELL REQ'TS.
7. PANEL "LC"
8. MODULAR BUILDING (TYPICAL)
9. PULL BOX: CHRISTY No. N-9 WITH No. 1135 EXTENSION, No. 4121 BOXES & T-51 LID
10. PULL BOX: CHRISTY No. 9 WITH No. 1135 EXTENSION, No. 4121 BOXES AND J100 LID.
11. PROVIDE 4 GANG W.P. OUTLET ON POLE (SEE MECH. DWG. G, DET. 2). INSTALL CONDUIT INS PROVIDE #12 AWG "GROUND" PER CODE.
12. 1¼"HTC TO PANEL "LB"
13. 4#250MCM THWN, 2½"C TO PANEL "LD", CIRCUIT
14. 4#250 MCM THWN, 2½"C
15. 4#2 THWN, 1¼"C TO MAIN SWITCHBOARD (SEE ONE LINE DIA. 1/E7)
16. 4#2 THWN, 1¼"C
17. 3#12, 3#12 THWN, 1¼"C TO MAIN SWITCHBOARD (SEE DIA. 1/E7). CONNECT 3#12 TO MOMENTARY CONTACT IN CONTROL ROOM.
18. 3#2, 3#12 THWN, 1¼"C
19. —
20. —
21. TYPICAL PORTABLE BUILDING SERVICE (SEE 1/E2). VERIFY EXACT LOCATION WITH PRIOR TO ROUGH-IN.
22. COMM. SERVICE: TEL: 3¼"C PAGE/AUDIO MONITOR: 1"C
23. COMM. SERVICE: TEL: 1"C VIDEO MONITOR: 1"C PAGE/AUDIO MONITOR: 1"C
24. COMM. SERVICE: TEL: 1½"C VIDEO MONITOR: 1"C PAGE/AUDIO MONITOR: 1"C
25. COMM. SERVICE: TEL: 1½"C VIDEO MONITOR: 1"C PAGE/AUDIO MONITOR: 1"C
26. PROVIDE MOMENTARY-CONTACT SWITCH "C". INSTALL IN GUARD TRAILER AS DIRECTED BY ARCHITECT. PROVIDE SEALTITE FLEX FROM SERVICE PEDISTAL TO J.B. ON TRAILER. MAKE ALL NECESSARY CONNECTIONS
27. —
28. INSTALL TANK 1" HIGH LEVEL ALARM" IN WP ENCLOSURE (FURNISHED W/ TANKS)
29. WP J-BOX
30. CONNECT LIQUID-LEVEL ALARM SWITCH. PROVIDE CONDUIT "SEAL-OFF" FITTING. ALL FITTINGS, ETC. IN TANK SHALL BE EXPLOSION-PROOF (SEE DETAIL 3/P1)
31. SEWAGE HOLDING TANKS (SPD)

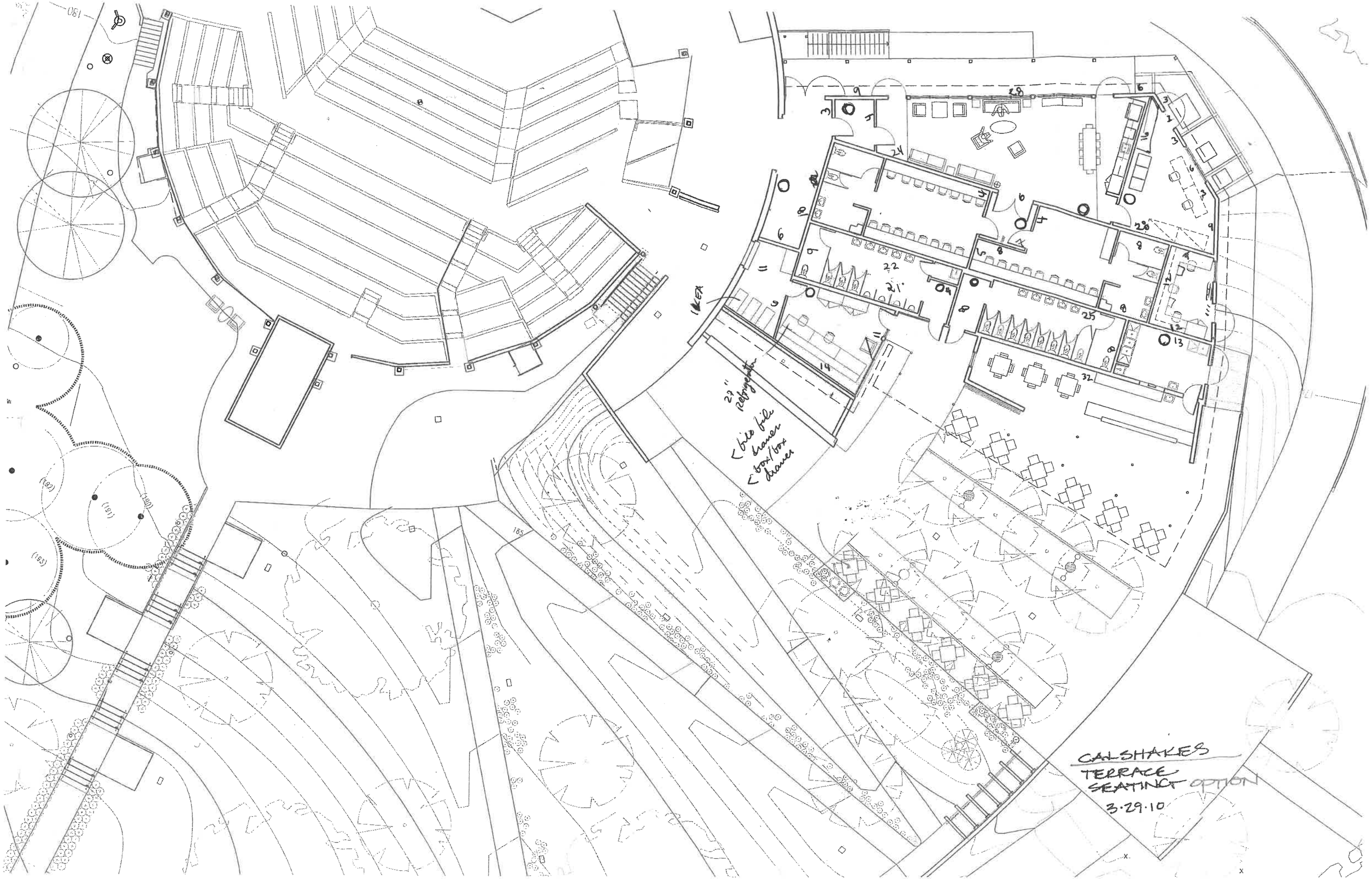
CALSHAKES
TERRACE
SEATING OPTION
3·29·10
27" cabinets
< file drawer
< box/box drawer
IKEA
165
180

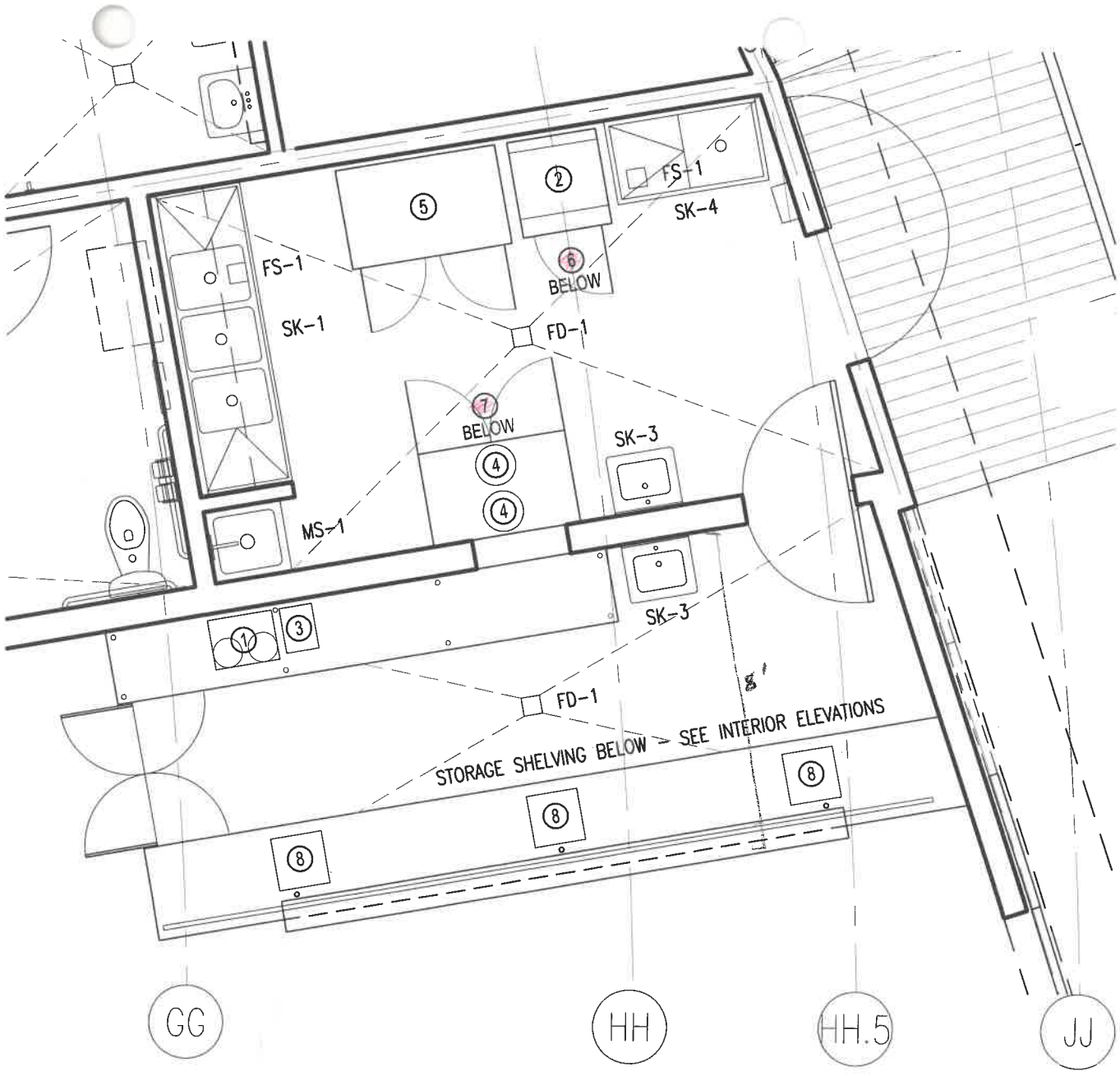

EQUIPMENT LEGEND

1. FETCO COFFEE MACHINE - CBS-52H15
2. TOASTMASTER HOT FOOD SERVER - 3B80A
3. REGALWARE 101 CUP COFFEE URN - 58001R
4. 11 QT. HI-TEC FOOD WARMER
5. TRAULSEN G20010 REACH-IN REFRIGERATOR
6. BEVERAGE AIR WTR 27 WORKTOP REFRIGERATOR
7. BEVERAGE AIR WTR48 WORKTOP REFRIGERATOR
8. SHARP XE-A404 ELECTRONIC CASH REGISTER

CALIFORNIA SHAKESPEARE THEATER
100 GATEWAY BOULEVARD, ORINDA, CALIFORNIA

LEDDY MAYTUM STACY ARCHITECTS
677 HARRISON STREET
SAN FRANCISCO CA 94107
T 415.495.1700
F 415.495.1717

EQPT-1

THEATER BUILDING CONCESSION EQUIPMENT PLAN

SCALE: 1/4"=1'-0"	DATE: 09.02.2009

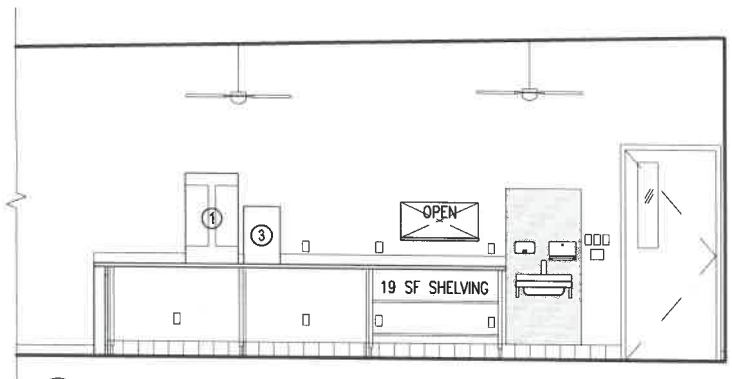

5 THEATER BLDG. – CONCESSION, RM. T101 (NORTH)

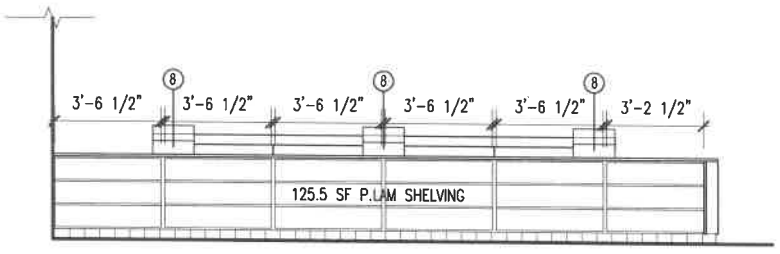

3 THEATER BLDG. – CONCESSION, RM. T101 (CASEWORK NORTH)

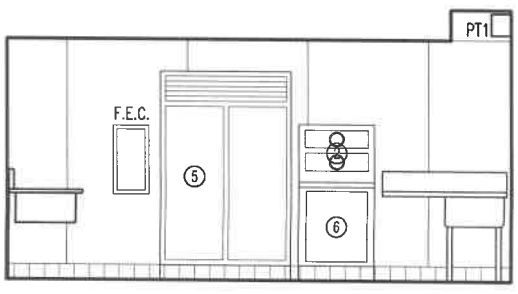

1 THEATER BLDG. – STORAGE, RM. T105 (NORTH)

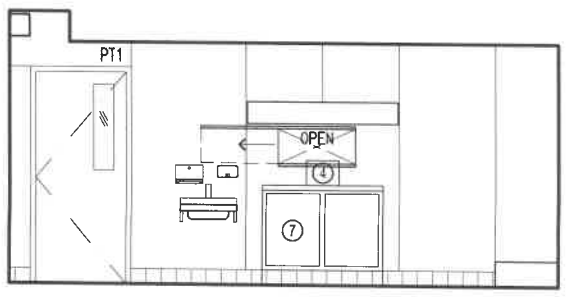

2 THEATER BLDG. – STORAGE, RM. T105 (SOUTH)

EQUIPMENT LEGEND

1. FETCO COFFEE MACHINE - CBS-52H15
2. TOASTMASTER HOT FOOD SERVER - 3B80A
3. REGALWARE 101 CUP COFFEE URN - 58001R
4. 11 QT. HI-TEC FOOD WARMER
5. TRAULSEN G20010 REACH-IN REFRIGERATOR
6. BEVERAGE AIR WTR27 WORKTOP REFRIGERATOR
7. BEVERAGE AIR WTR48 WORKTOP REFRIGERATOR
8. SHARP XE-A404 ELECTRONIC CASH REGISTER
9. METRO SHELVING 18" x 54"
10. METRO SHELVING 18" x 72"
11. METRO SHELVING 18" x 30"

CALIFORNIA SHAKESPEARE THEATER
100 GATEWAY BOULEVARD, ORINDA, CALIFORNIA

LEDDY MAYTUM STACY ARCHITECTS
677 HARRISON STREET
SAN FRANCISCO CA 94107
T 415.495.1700
F 415.495.1717

EQPT-3

INTERIOR ELEVATIONS - THEATER BUILDING & UPPER GROVE BUILDING CONCESSION EQUIPMENT

SCALE: 1/4"=1'-0" | DATE: 09.02.2009

LEDDY MAYTUM STACY ARCHITECTS

LMSA

PROPOSAL REQUEST

PR NO.: 05

Date: April 02, 2010
Contract For: Construction – PHASE 1

Contract Dated: September 15, 2009
Architect's Proj. No.: 0614

COPY TO:
Owner

Jim Roethe
Susie Falk
Kate Cost
Terry Bush

Contractor

Mike Handley
Dennis Zampa
Kevin Smith

PROJECT: California Shakespeare Theater
100 Gateway Boulevard
Orinda, CA 94563

OWNER: California Shakespeare Theater
701 Heinz Avenue
Berkeley, CA 94710

TO (Contractor): C. Overaa & Co.
200 Parr Boulevard
Richmond, CA 94801

ARCHITECT: Leddy Maytum Stacy Architects
677 Harrison Street
San Francisco, CA 94107

---

*Please submit an itemized proposal for changes in the Contract Sum and contract Time for proposed modifications to the Contract documents described herein. Submit proposal within **10** days, or notify the Architect in writing of the date on which you anticipate submitting your proposal.*

THIS IS NOT A CHANGE ORDER, A CONSTRUCTION CHANGE DIRECTIVE, OR A DIRECTION TO PROCEED WITH THE WORK DESCRIBED IN THE PROPOSED MODIFICATIONS.

Description:

Per direction from Owner, provide the following utilities to the Upper Grove area.
1. Electrical connection of existing utility box at Upper Grove to provide power to the Owner-furnished temporary restroom facilities & lighting in this area. See ESD-010 for proposed backfeed coordinated with site pole lighting backfeed as described in RFI 048 response & ESD-007.

2. Extend domestic water line across fire access road for connection to the Owner-furnished temporary restroom facilities. See Phasing Diagram C5.0 for location of capped DW line in Phase 1.

Attached:	**Reference:**
ESD-010	RFI response 048
ESD-011	ESD-007
	Phasing Diagram C5.0

ISSUED BY: LEDDY MAYTUM STACY ARCHITECTS
BY: Chris May

LEDDY MAYTUM STACY ARCHITECTS

LMS^A

CONSTRUCTION CHANGE DIRECTIVE

CCD NO.: 02

Date: April 02, 2010

COPY TO:
Owner: Jim Roethe
David Goldsmith
Kate Cost
Susie Falk
Terry Bush

Contractor: Kevin Smith
Mike Handley

Field: Dennis Zampa

LMS Project No.: 0614
Contract For: Construction – PHASE 1
Contract Dated: September 15, 2009

PROJECT: California Shakespeare Theater
100 Gateway Boulevard
Orinda, CA 94563

OWNER: California Shakespeare Theater
701 Heinz Avenue
Berkeley, CA 94710

TO (Contractor): C. Overaa & Co.
200 Parr Boulevard
Richmond, CA 94801

ARCHITECT: Leddy Maytum Stacy Architects
677 Harrison Street
San Francisco, CA 94107

You are hereby directed to make changes in this Contract as described below.

Description:

Grove Electrical at Entry Path:
Per direction from Owner, provide conduit & power to in-grade boxes on either side of the entry path per attached ESD-008. These in-ground boxes will be the point-of-connection for Owner to provide power to the Groves and connection of site path lighting.

Attachments: ESD 008

LEDDY MAYTUM STACY ARCHITECTS

LMSA

PROPOSAL REQUEST

PR NO.: 06

Date: April 02, 2010
Contract For: Construction – PHASE 1

Contract Dated: September 15, 2009
Architect's Proj. No.: 0614

COPY TO:
Owner

Jim Roethe
Susie Falk
Kate Cost
Terry Bush

Contractor

Mike Handley
Dennis Zampa
Kevin Smith

PROJECT: California Shakespeare Theater
100 Gateway Boulevard
Orinda, CA 94563

OWNER: California Shakespeare Theater
701 Heinz Avenue
Berkeley, CA 94710

TO (Contractor): C. Overaa & Co.
200 Parr Boulevard
Richmond, CA 94801

ARCHITECT: Leddy Maytum Stacy Architects
677 Harrison Street
San Francisco, CA 94107

---

*Please submit an itemized proposal for changes in the Contract Sum and contract Time for proposed modifications to the Contract documents described herein. Submit proposal within **10** days, or notify the Architect in writing of the date on which you anticipate submitting your proposal.*

THIS IS NOT A CHANGE ORDER, A CONSTRUCTION CHANGE DIRECTIVE, OR A DIRECTION TO PROCEED WITH THE WORK DESCRIBED IN THE PROPOSED MODIFICATIONS.

Description:

Provide pricing for the following:
1. Provide power to panel in pre-fabricated ticket booth building per ESD-009 & sheet notes on ESD-011 and extend conduit routing from in-ground box.
2. Provide conduit and power from panel in pre-fabricated ticket booth building across road to gate operator and WP power receptacle for signage lighting as shown on ESD-009, sheet notes on ESD-011.

Reference:
ESD-009
ESD-011

ISSUED BY: LEDDY MAYTUM STACY ARCHITECTS
BY: Chris May

ZETA Communities, Inc.
5321 Luce Ave., Bay F
McClellan, CA 95652
T. 916-565-0900 **F.** 916-333-5322

Shakespeare Ticket Booth: Preliminary Specifications

Client:	Leddy Maytum Stacy	Phone: (415) 495-1700	Job Name: Shakespeare	Date:	2/17/2010
ZETA Project Manager:	Todd Gipson	Phone: (916) 333-5322	Sales #:	Invoice #:	
Site Address:		City:	State:	Zip:	

SCOPE OF RESPONSIBIITY

Note: ANY CHANGES TO DOCUMENT AFTER CLIENTS SIGNATURE WILL RESULT IN A CHANGE ORDER.
Index: Z = ZETA FACTORY & INSTALL TEAM CL = CLIENT EX = EXCLUDED from CONTRACT

Qty	Code	Z-500 Specifications and Options	Material Allowance	$ -
		ZETA Energy & Environmental Performance	TBD -Purchase Contract	
		Hers Rating:		
		Title 24:		
		Build It Green:		
		Potential LEED Rating:		

Building Specifications			Z	CL	EX
Authorized Builder is responsible for providing site specific information that will insure that this structure meets the codes of its destination.					
CAL Fire (WUI):	Wildland-Urban Interface: ☐	$ -			
	Note: * Indicates upgrades are required to meet WUI.	$ -			
Roof Load:	Per structural engineering plans	$ -			
Ground Snow Load:	40 lbs.	$ -			
Wind:	Per structural engineering plans	$ -			
Seismic:	Per structural engineering plans	$ -			
Foundation:	☐ Typ. Plan By ZETA ☑ /A	$ -			
	☐ ☐	$ -			
Framing	**SFI = Sustainably Forested Products**		Z	CL	EX
Exterior Walls:	2" x 6" Framing 16" O.C.		Z		
Side Wall Height:	10'4" Low side to 15' High side		Z		
Floors:	Temperary if nessessary		Z		
Structurally Engineered Rims:	Double Rim Joists 1 3/4" x 9 1/4" LVL		Z		
Floor Decking:	NONE				
Interior Wall:	2"X4" Surface Dried Lumber (when applicable) 16"O.C.		Z		
Roof:	2x Construction as required		Z		
Eaves:	☐ Boxed ☐ xposed Rafter Tails				
Roof Pitch:	Flat roof		Z		
Roof Sheathing:	15/32" OSB Radiant Barrier		Z		
Exterior Siding, Trim, and Decking			Z	CL	EX
Siding:	Cemplank Lap siding - Fiber cement Boards 7" exposure		Z		
Color Selection:	1 of 5 standard ICI colors		Z		
Siding Option:	Cedarmill	$ -	Z		
Delete:		$ -			
Window Trim:	Fry reglet J- profile		Z		
Corner Trim:	Fry reglet J- profile		Z		
Parapet Cap:	22 gauge Galvanized painted metal		Z		
Thermal & Moisture Protection			Z	CL	EX
Insulation:	First Floor: N/A				
	Ext. Walls: R-19		Z		
	Attic: R-30		Z		
Option:	1" rigid foam - R-5 increase				
Note:	Insulation TBD				
House Wrap:	"Breathable" wrap such as Typar, GreenGuard or equal		Z		

Signature: _____ Date: _____

ZETA Communities, Inc.
5321 Luce Ave., Bay F
McClellan, CA 95652
T. 916-565-0900 **F.** 916-333-5322

Shakespeare Ticket Booth: Preliminary Specifications

Client:	Leddy Maytum Stacy	Phone: (415) 495-1700		Job Name:	Shakespeare	Date:	2/17/2010
ZETA Project Manager:	Todd Gipson	Phone: (916) 333-5322		Sales #:		Invoice #:	
Site Address:		City:		State:		Zip:	

SCOPE OF RESPONSIBIITY

			Z	CL	EX
Roofing					
GAF EverGuard	Standing Seam metal roof with metal fascia and gutter, Typ.		Z		
Color Selection:	Select				
Option:		$ -			
Eaves:	☐ Boxed ☐ Fascia				
HVAC					
Option:		$ -			
Option:		$ -			
Drywall					
Walls & Ceiling:	High strength or 5/8 gypsum		Z		
Finish:	Imperfect smooth		Z		
Option:	Level 4				
Windows R-Value = 2.3					
Windows:	PTD aluminum double hung Windows		Z		
Exterior finish:	PTD aluminum double hung Windows	$ -	Z		
Interior Finish:	PTD aluminum double hung Windows	$ -	Z		
Option:		$ -			
Hardware:	Standard white	$ -			
Exterior Doors					
Exterior Doors:	Therma TRU		Z		
Exterior finish:	HM Door PTD	$ -	Z		
Hardware:	Brushed Nickel				
Options:		$ -			
Hardware:	TBD	$ -	Z		
Hardware/Mirrors/Shower Doors					
Front Entry Lock:	Brushed Nickel		Z		
Light Fixtures					
Exterior Front:	"Energy Star" rated light fixtures (CFL)		Z		
Exterior Rear:	"Energy Star" rated light fixtures (CFL)		Z		
Rooms:	"Energy Star" rated light fixtures (CFL)				
Electrical					
Electric Panel:	200 amp standard, location per plan		Z		
Service Entry:	☐ Over-head ☐ Underground				
Locations:		$ -			
Switches:	Rocker Style, white, locations per plan		Z		
Option:		$ -			
Outlets:	Décor Style, white, type and locations per plan		Z		
Option:		$ -			
Exterior GFI:	Front and Back, per plan		Z		
Exhaust Fans:	"Whisper quiet" 80 CFM		Z		
Cabinets					
Kitchen:	Urea Formaldehyde Free "Diamond B" Cabinets				
Counters					
Kitchen:	Granite				

Signature: _____ Date: _____

ZETA Communities, Inc.
5321 Luce Ave., Bay F
McClellan, CA 95652
T. 916-565-0900 **F.** 916-333-5322

Shakespeare Ticket Booth: Preliminary Specifications

Client:	Leddy Maytum Stacy	Phone: (415) 495-1700	Job Name: Shakespeare	Date:	2/17/2010
ZETA Project Manager:	Todd Gipson	Phone: (916) 333-5322	Sales #:	Invoice #:	
Site Address:		City:	State:	Zip:	

SCOPE OF RESPONSIBILITY

Paint			Z	CL	EX
Paint	ICI Low or No VOC paint washable eggshell		Z		
Interior Flat:	ICI Low or No VOC paint washable eggshell		Z		
Int. Gloss, Doors:	ICI Low or No VOC paint washable eggshell		Z		
Interior Paint:	ICI Low or No VOC paint washable eggshell		Z		
Exterior Color:	ICI Low or No VOC paint washable eggshell		Z		
Color Selection:		$ -			
Note:		$ -			
Opt. Door Color:		$ -			
Delete Exterior:		$ -			

Signature: _____ Date: _____

WILLIAM B. WALKER, M.D.
HEALTH SERVICES DIRECTOR

SHERMAN L. QUINLAN, REHS, MPH
ENVIRONMENTAL HEALTH DIRECTOR

CONTRA COSTA
HEALTH SERVICES

CONTRA COSTA
ENVIRONMENTAL HEALTH

2120 Diamond Blvd., Suite 200
Concord, California 94520
Ph (925) 692-2500
Fax (925) 692-2502
www.cocoeh.org

August 31, 2009

Christopher May
LEDDY MAYTUM STACY Architects
677 Harrison Street
San Francisco, CA 94107

Plan Review Report For: Bruns Memorial Amphitheater (SR 2633)
Location: 100 Gateway Blvd. Orinda, CA
Scope of Work: New Food Facility-Snack Bar

Dear Mr. May:

Environmental Health Division has completed its review of the revised plans for the above referenced project that were submitted to this office on August 18, 2009. The plans are **approved** subject to the following conditions:

General Conditions

1. **Provide a copy of this letter to all contractors. Read and comply with all conditions. This agency will require the correction of improper work.**
2. This plan approval is valid for a period not to exceed six months from the date of this letter (one year if the work has started within six months from the date of approval).
3. A copy of the approved plans, supporting documents, this plan approval letter, and any subsequently approved changes or amendments, must be kept at the site during construction operations.
4. Plans are not to be changed or amended without prior written authorization from Contra Costa Environmental Health.
5. Nothing contained in this plan approval is deemed to authorize deviation from applicable laws, regulations, policies, or the Contra Costa Environmental Health *Construction Requirements For Retail Food Facilities*. Plan approval shall not prevent Contra Costa Environmental Health from subsequently requiring the correction of errors or omissions in such plans or specifications.
6. All necessary approvals and permits shall be obtained from the local building department and other required agencies (e.g., sewer agency, planning department, fire department, etc.) prior to starting work. **Construction inspections will not be scheduled if these other permits are not on site.**
7. The owner of the permitted facility is responsible for scheduling the required construction inspections. At least two construction inspections are required, which includes the following:
    a. A *pre-final* inspection must be scheduled when room finishes are completed and plumbing, ventilation, and equipment are in place. **Schedule all inspections at least 4 working days in advance.**

Item No. _____
Quantity _____

BEVERAGE-AIR

PO Box 5932, Spartanburg, SC 29304
1-888-845-9800 Fax# 1-864-582-5083
http://www.Beverage-Air.com

Commercial Refrigeration Equipment
General Specification

WORK TOP REFRIGERATORS
29" BASE MODEL SERIES

MODELS:
WTR27A
WTR48A
WTR60A
WTR72A

WTR SERIES WORKTOP UNITS
Versatile, compact (29" deep) models with stainless steel work tops and refrigerated storage of food products. Working height is 35 1/2."

CABINET CONSTRUCTION
Heavy duty construction includes stainless steel on front, sides, door(s) and grille. Stainless steel 2 1/2" thick worktop with 4" high removable backsplash. Cabinet back and bottom are galvanized steel. Interior liner is made of anodized aluminum for longer lasting corrosion protection. Interior thermometer is standard.

Cabinets are insulated with foamed-in-place polyurethane insulation of 2" minimum thickness. Doors are mounted to cabinet on self-closing, cartridge style hinges with 120° stay open feature. A plug-in type vinyl magnetic gasket is attached to each door for positive seal. Convenient, contoured, pull handle is made of black anodized aluminum. Interior arrangement includes 2 steel wire epoxy coated shelves behind each door, adjustable in 1/2 inch increments. Interior light with manual switch is provided with glass door models.

REFRIGERATION
Refrigeration system utilizes R134a refrigerant metered by a capillary tube system. Automatic (non-electric) condensate evaporator is standard. Interior forced air system, with high humidity evaporator coils, provides the ideal environment for food preservation.

ELECTRICAL
Units wired at factory and ready for connection to a 115/60/1 phase, 15 amp dedicated outlet. 8' long cord and plug set included.

SPECIAL FEATURES
- Cartridge style door hinges provides positive seal & eliminates door sagging issues (excludes glass door and some special units).
- 6" casters, two with brakes standard.
- Optional 6" legs or 3" casters available

***Note**: Overall heights of casters may vary with different types of casters depending upon caster manufacturer designations.

WTR27

WTR48

WTR60

ELECTRICAL CONNECTION

115/60/1
NEMA-5-15P

Units pre-wired at factory and include 8' long cord and plug

Available From:

***Note**: Not all markings may apply to all model variations.

FETCO®

ITEM NUMBER:_____

MODEL CBS-52H15
SERIES 5000

Dispensers Sold Separately

Patents: 5,000,082, 5,331,885, 6,889,598, Other Patents Pending. International Patents Apply.

The LUXUS® Thermal Dispenser is totally portable, and requires no electric power. Once filled and capped it goes anywhere...Ready to act as your remote dispensing station wherever needed.

You can prepare them ahead of time and place them where you want them. It is important to note that the LUXUS® Thermal Dispenser can be staff-operated or used as a self-service system.

Printed in USA 2006

The Ultimate Coffee Machine

Your answer to brewing the best tasting coffee consistently day after day...

Developed with proprietary designs and technologies, FETCO® equipment ensures safety and integrity of each brew with innovative designs such as:

The Dual Brew Basket Safety Lock incorporated into the start switch brews directly into our patented LUXUS® Thermal Dispenser to ensure a continuous flow of hot, aromatic, great tasting coffee.

Stainless Steel Gourmet size baskets are designed for heavier brew ratios.

FETCO® Brewers utilize the most recent technological advances in Coffee Brewing in order to...

Hold a constant water temperature during 100% of brew cycle; maintain sprayover volume consistency; resist lime buildup inside dispense tube system; and utilize all solid state components.

Consultant & Contractor Approvals:

FETCO®
600 Rose Road
Lake Zurich, Illinois 60047 USA
Phone: (847) 719-3000
Toll Free: (800) FETCO-99
FAX: (847) 719-3001
sales@fetco.com
http://www.fetco.com

Item No. _____

Quantity _____

BEVERAGE-AIR.

Commercial Refrigeration Equipment
General Specifications

29" DEPTH WORKTOP REFRIGERATOR

FOOD PREPARATION SERIES

MODELS:
WTR27
WTRD27
WTR48
WTR60
WTR72

WORKTOP COOLERS

Versatile, compact (29" deep) models with stainless steel work tops and refrigerated storage of food products. Working height is 35-1/2".

Cabinet construction:

Heavy duty construction, #3 finish stainless steel on front, sides, door(s) and grille. Stainless steel 2-1/2" thick work top with 4" high removable backsplash. Exterior back and bottom made from galvanized steel. Interior liner is made of corrosion resistant anodized aluminum. Interior thermometer is standard.

Cabinets are insulated with foamed-in-place polyurethane insulation of 2" minimum thickness. Doors are mounted to cabinet self-closing on cam lift hinges with 120 degree stay open feature. Pull-out drawers (2) on Model WTRD27 will accommodate 12x20 pans by others. Each door or drawer equipped with a snap in place vinyl magnetic gasket for a positive seal. Double pull style door handle made of black anodized aluminum. 6" high casters are standard, 2 include brakes. An 8' cord set is provided with 115 volt models. Cabinet interior standard with two epoxy wire coated shelves per section, adjustable in 1/2 inch increments. Interior light with manual switch is provided with glass door models.

Refrigeration:

Refrigeration system utilizes R134a refrigerant metered by a capillary tube system. Automatic (non-electric) condensate evaporator is standard. Unique front breathing through grilles located below doors permits unit to be installed against back walls and curbs. Interior forced air system, with high humidity evaporator coils, provides the ideal environment for food preservation.

WTR27

WTRD27

WTR48

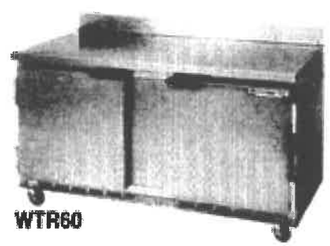

WTR60

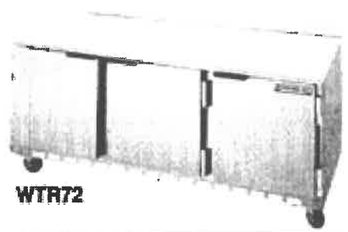

WTR72

Made in USA
http://www.Beverage-Air.com

BEVERAGE-AIR.
a Galaxy Equipment company
PO Box 5932, Spartanburg, SC 29304
1-800-845-9800 Fax No. 1-864-582-5083