EAST BAY MUNICIPAL UTILITY DISTRICT

SPECIAL DISTRICT NO. 1

Oakland, California

EBMUD

MWWTP
DIGESTER HEATING SYSTEM IMPROVEMENTS

SD-274

MAY 2003

Volume 3 Drawings

Recommended

Edward H. McCormick
Mgr. of Support Services
R.P.E. No. 33317

Approved

David R. Williams
Director of Wastewater
R.P.E. No. C 25942

USER: fburke
DATE: 29-JUL-2003 16:30
FILE: P:\cad\23011-EBMUD\ANewDGN\274cover.R00

PROJECT/SITE CONDITIONS

CORROSIVE

INDICATES THAT ALL ELECTRICAL EQUIPMENT AND MATERIALS INSTALLED WITHIN THE ROOM OR AREA IN WHICH THIS NOTATION APPEARS SHALL BE OF NEMA 4X CORROSION RESISTANT CONSTRUCTION SUITABLE FOR USE IN A WET LOCATION, UNLESS OTHERWISE NOTED.

CLASS 1, DIV.1 GROUP D

INDICATES THAT ALL ELECTRICAL EQUIPMENT AND MATERIALS INSTALLED WITHIN THE ROOM OR AREA IN WHICH THIS NOTATION APPEARS SHALL CONFORM TO N.E.C. REQUIREMENTS FOR THE HAZARDOUS AREA CLASSIFICATION AS SHOWN.

HH23 — MANHOLE (MH) OR HANDHOLE (HH),

JB27ØØA (J) — JUNCTION BOX. OPTIONAL IDENTIFIER.

TB1Ø35 (TB) — TERMINAL BOX. OPTIONAL IDENTIFIER.

PXXXX — CONTENTS AND SIZES. RACEWAY SIZE WITH CONDUCTOR

MOTORS AND EQUIPMENT

M — M=MOTOR
SV=SOLENOID VALVE
CV=CONTROL VALVE
A=ADJUSTABLE SPEED DRIVE

⊗ — FIELD INSTRUMENT

▣ — DIAGRAMS FOR DEVICES REQUIRED CONTROL STATION. SEE CONTROL

CONDUITS

P1234 — CONDUIT IDENTIFIER

RACEWAY EXPOSED

CONDUIT TURNING AWAY FROM VIEWER

CONDUIT TURNED TOWARD AND AWAY FROM VIEWER.

CONDUIT TEEING TOWARD VIEWER

WIRING DEVICES

SWITCHES:

UNLESS OTHERWISE NOTED, ALL SWITCHES ARE WALL MOUNTED.

$ — 2Ø AMP TOGGLE SWITCH, SINGLE POLE,

DISTRIBUTION EQUIPMENT

NUMBER OF SECTIONS IS ESTIMATED. WHERE POSSIBLE. HOWEVER, EXACT SIZE AND APPROXIMATE SHAPE AND SCALE REPRESENTED

TRANSFORMER, OR MOTOR CONTROL CENTER ASSEMBLY, SUCH AS A SWITCHBOARD, FLOOR-STANDING DISTRIBUTION

MCC1234 — EQUIPMENT DESIGNATION (EXAMPLE)

TERMINAL CABINET MOTOR STARTER PANEL, OR ASSEMBLY, SUCH AS PANELBOARD, WALL-MOUNTED DISTRIBUTION

PBD1234 — EQUIPMENT DESIGNATION (EXAMPLE)

GENERAL NOTES:

1. ELECTRICAL SYMBOLS AND STANDARD DETAILS DRAWINGS ARE GENERAL IN NATURE. SOME SYMBOLS AND DETAILS SHOWN HEREON MAY NOT BE USED ON THE CONTRACT DRAWINGS.
2. IDENTIFICATIONS (ID), SIZES, RATINGS, LOCATIONS AND SIMILAR INFORMATION ASSOCIATED WITH SYMBOLS MAY NOT BE SHOWN; SEE SPECIFICATIONS AND NATIONAL ELECTRICAL CODE FOR MINIMUM SIZE IF NOT SHOWN.
3. THE ELECTRICAL AND INSTRUMENTATION DRAWINGS USE THE SINGLE LINE, AND CONDUIT AND CABLE SCHEDULE IN CONJUNCTION WITH PLAN DRAWINGS TO DEPICT THE WORK. THE CONTRACTOR SHALL USE THESE DOCUMENTS TO DETERMINE AND PROVIDE THE NECESSARY RACEWAY AND WIRING SYSTEM FOR EACH EQUIPMENT. ALL RACEWAY SHALL BE ROUTED BY THE CONTRACTOR, UNLESS OTHERWISE NOTED.
4. IF EQUIPMENT SUPPLIED BY MANUFACTURER HAS A LARGER LOAD THAN INDICATED ON THE SINGLE LINE DIAGRAM, THE CONSTRUCTION MANAGER SHALL BE NOTIFIED. THE CABLE, CONDUIT AND ELECTRICAL EQUIPMENT SHALL BE SIZED AS REQUIRED, TO ACCOMMODATE THE LARGER LOAD.
5. IN AREAS WHERE THERE ARE OVERHEAD BRIDGE CRANES, HOISTS, ETC., OR WHERE EQUIPMENT IS LIFTED AND MOVED FOR MAINTENANCE OR REPLACEMENT, NO RACEWAYS SHALL BE RUN OVERHEAD THAT WILL INTERFERE WITH THE OPERATION OF THE EQUIPMENT.
6. THE LOCATION OF THE CONTROL STATIONS AND DEVICES SHOWN ON THE PLAN DRAWINGS ARE DIAGRAMMATIC AND THE ACTUAL LOCATION SHALL BE COORDINATED IN THE FIELD WITH THE CONSTRUCTION MANAGER.
7. THE FINAL LOCATION OF MOTORS AND ACCESSORIES MAY NOT BE AS SHOWN. THE CONTRACTOR SHALL COORDINATE WITH THE STRUCTURAL AND MECHANICAL DRAWINGS AND SHOP DRAWINGS FOR THE EQUIPMENT PROVIDED FOR CONDUIT STUBUP AND TERMINATION LOCATIONS.
8. THE STANDARD DETAILS SHALL BE USED WHERE APPLICABLE.
9. ALL EQUIPMENT SHALL BE LABELED WITH NAMEPLATES. DESCRIPTION OF EQUIPMENT SHALL BE IN ACCORDANCE WITH THE SINGLE LINE OR CONTROL DIAGRAM DESCRIPTION. IF NAMEPLATE IS NOT DESCRIBED ON THE DRAWINGS, CONSULT WITH THE CONSTRUCTION MANAGER AND PROVIDE A NAMEPLATE THAT DESCRIBES AT LEAST THE NAME AND FUNCTION

BY CONSULTANT
29-JUL-2003 16:35
P:<cdd>230ll-EBMUD≤ANewDGN≤2746001.R00

REGISTERED PROFESSIONAL ENGINEER — TRACY MARIE STEERS — No. C35503 — Exp. 09-30-03 — CIVIL — STATE OF CALIFORNIA

REGISTERED PROFESSIONAL ENGINEER — ROGER P. ANDERSON — No. 11592 — Exp. 9-30-04 — STATE OF CALIFORNIA

3" ON ORIGINAL DOCUMENT
Ø 1 2 3

NO.	DATE		BY	REC.

BROWN AND CALDWELL

DESIGNED BY RPA
DESIGN CHECKED BY RNS
DRAWN BY KB
SR. PROJ ENGR. R.P.E. NO. C35503
APPROVED
PRINCIPAL IN CHARGE, R.P.E. NO.

EBMUD REVIEW
PROJECT ENGR. R.P.E. NO.
PROJECT MGR. DONALD KIANG R.P.E. NO. C 29341
RECOMMENDED SR. ENGR. OLUJINI YOLOYE R.P.E. NO. C 44278

EAST BAY MUNICIPAL UTILITY DISTRICT
SPECIAL DISTRICT No. 1
OAKLAND, CALIFORNIA

MWWTP
DIGESTER HEATING SYSTEM IMPROVEMENTS
ELECTRICAL

ELECTRICAL SYMBOLS 1

FACILITY: MWWTP
SCALE: NO SCALE
DATE: APRIL 2003

DRAWING No. SD274-E-ØØ1
SHEET 23 OF 44

SPECIFICATION NO: SD274

CONTROL DIAGRAM SYMBOLS

GENERAL

ENCLOSURE BOUNDARY

CONDUCTORS CONNECTED

CONDUCTORS NOT CONNECTED

CONNECTIONS
TERMINAL POINT FOR EXTERNAL

TRANSFORMERS

480
120V — SIZE AS SHOWN OR SPECIFIED. CONTROL TRANSFORMER. PRIMARY AND SECONDARY VOLTAGES SHOWN.

50/5 — SECONDARY TURNS RATIO SHOWN. CURRENT TRANSFORMER. PRIMARY/

DISCONNECTS AND OVERCURRENT DEVICES

40A — MODIFIERS: THERMAL MAGNETIC, 3 POLE, UON. RATING IN AMPS CIRCUIT BREAKER.

/M MAGNETIC ONLY
/2 POLES, IF OTHER THAN 3
/AF AMP FRAME
/AT AMP TRIP
/AS AMP SENSOR

ID — FUSE

MODIFIERS:

CLF = CURRENT LIMITING FUSE
DE = DUAL ELEMENT
F = CLASS F

NEON BLOWN FUSE INDICATOR

DISCONNECT SWITCH

PUSHBUTTONS

ID / DESCPTN — NORMALLY OPEN PUSHBUTTON, MOMENTARY CONTACT,

ID / DESCPTN — NORMALLY CLOSED PUSHBUTTON, MOMENTARY CONTACT,

SELECTOR SWITCHES

ID, H, O, A

3 POSITION MAINTAINED CONTACT
X = CONTACTS CLOSED

CONTROL RELAYS

OL — THERMAL OVERLOAD RELAY

CR2 CR2 — OUTPUT CONTACTS

CONTACTORS

ID, C — OPERATING COILS

C= CONTACTOR, LIGHTING OR GENERAL USE
F= FAST OR FORWARD
M= MAIN OR LINE
1M= FIRST MAIN OR WYE
2M= SECOND MAIN OR DELTA
R= RUN OR REVERSE
S= SLOW OR START

ID / SIZE — MAIN CONTACTS

OUTPUT LOADS AND DEVICES

MTR / M — MOTOR

INDICATING LIGHTS

INDICATING LIGHTS

L = LENS COLOR: A = AMBER
B = BLUE
G = GREEN
R = RED
W = WHITE

LINE, L, LEGEND — PUSH TO TEST. TEST VOLTAGE TERMINAL SHOWN

MISCELLANEOUS

CONNECTOR PLUG

GROUND CONNECTION

POTENTIOMETER

SHIELDED CABLE

▲ LOCATED IN THE FIELD

ETM — ELAPSED TIME METER

ONE LINE DIAGRAM SYMBOLS

S2 — SIZE 2 COMBINATION FULL VOLTAGE NON-REVERSING MAGNETIC STARTER MCP SIZED BY MANUFACTURER (OVERLOAD RELAY NOT SHOWN) RV = REDUCED VOLTAGE 2S2W = TWO-SPEED TWO-WINDING S2 = SIZE 2

MCCA-22, P1234, 20, 5 KW — CIRCUIT NO. MCA-22 IS ORIGINATING IN MCCA, TO 20HP MOTOR. LOADS ARE INDICATED IN HP OR KW.

MOTOR (TYP)
PACKAGED EQUIPMENT (TYP)

POWER AND CONTROL TO A PACKAGE UNIT, SHALL IMPLY THAT ANY AND ALL ASSOCIATED EQUIPMENT SHALL ALSO BE INSTALLED AND WIRED AS REQUIRED

15

INDICATES THAT ALL OR PART OF CIRCUIT MAY BE ROUTED IN DUCTBANK, EMBEDDED OR UNDERGROUND OUTSIDE THE BUILDING.

CIRCUIT BREAKER THERMAL MAGNETIC

INCOMING LINE

200A — DISCONNECT OR ISOLATING SWITCH. 200 AMP SHOWN

REGISTERED PROFESSIONAL ENGINEER — TRACY MARIE STORERS — No. C35503 — Exp. 09-30-03 — CIVIL — STATE OF CALIFORNIA

REGISTERED PROFESSIONAL ENGINEER — ROGER P. ANDERSON — No. 11592 — Exp. 9-30-04 — STATE OF CALIFORNIA

3" ON ORIGINAL DOCUMENT
0 1 2 3

NO.	DATE	BY	REC.

BROWN AND CALDWELL

DESIGNED BY	RPA
DESIGN CHECKED BY	RNS
DRAWN BY	KB
SR. PROJ ENGR. R.P.E. NO.	C35503
APPROVED	
PRINCIPAL IN CHARGE, R.P.E. NO.	

EBMUD REVIEW

PROJECT ENGR. R.P.E. NO.

PROJECT MGR. DONALD KIANG R.P.E. NO. C 29341

RECOMMENDED SR. ENGR. OLUJIMI YOLOYE R.P.E. NO. C 44278

EAST BAY MUNICIPAL UTILITY DISTRICT
SPECIAL DISTRICT No. 1
OAKLAND, CALIFORNIA

MWWTP
DIGESTER HEATING SYSTEM IMPROVEMENTS
ELECTRICAL

ELECTRICAL SYMBOLS 2

FACILITY: MWWTP	DRAWING No. SD274-E-002
SCALE: NO SCALE	
DATE: APRIL 2003	SHEET 24 OF 44

SPECIFICATION NO: SD274

BY CONSULTANT
29-JUL-2003 16:38
P:\cad\23011-EBMUD\dANewDGN\2274e002.R00

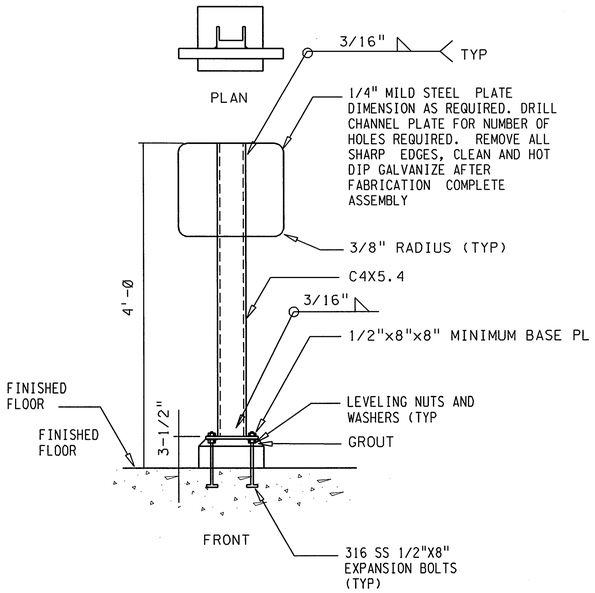

CONTROL STATION STAND

DETAIL A / VAR — NO SCALE

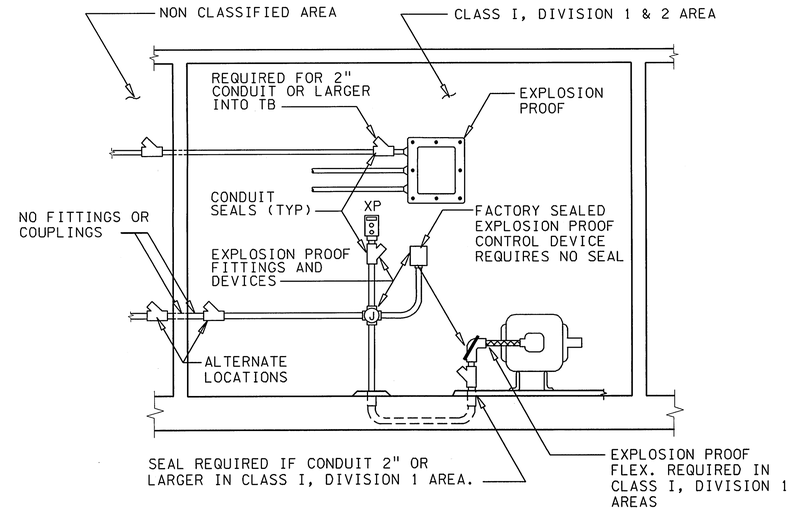

ELEVATION

NOTE

1. SEE NATIONAL ELECTRICAL CODE ARTICLE 501 FOR ADDITIONAL REQUIREMENTS.

DETAIL B / VAR — NO SCALE

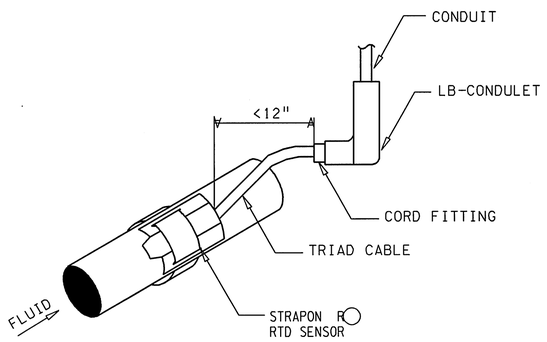

RTD SENSOR INSTALLATION

DETAIL C / VAR — NO SCALE

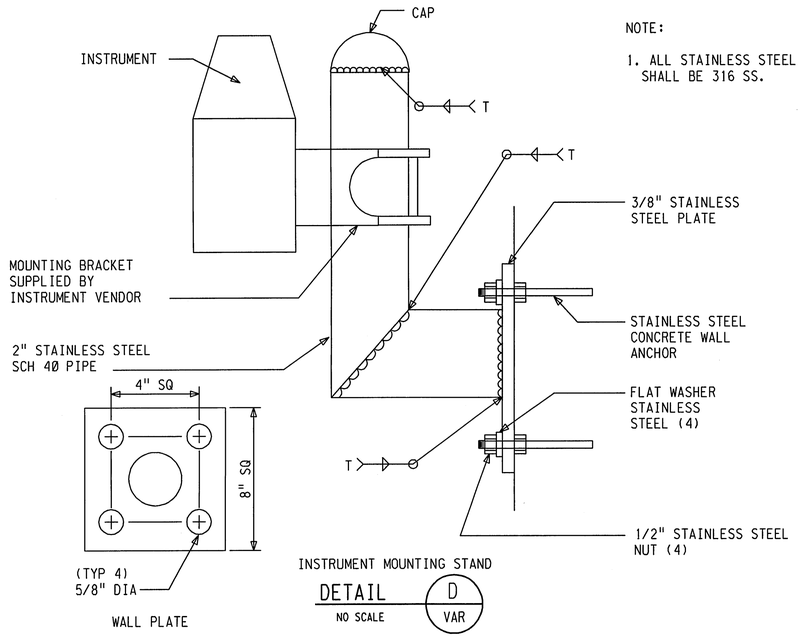

WALL PLATE

INSTRUMENT MOUNTING STAND

DETAIL D / VAR — NO SCALE

NOTE:

1. ALL STAINLESS STEEL SHALL BE 316 SS.

BY CONSULTANT
29-JUL-2003 16:42
P:\cad\23011-EBMUD\ANewDGN\274e003.R00

REGISTERED PROFESSIONAL ENGINEER — TRACY MARIE STORRS — No. C35503 — Exp. 09-30-03 — CIVIL — STATE OF CALIFORNIA

REGISTERED PROFESSIONAL ENGINEER — ROGER P. ANDERSON — No. 11592 — Exp. 9-30-04 — STATE OF CALIFORNIA

3" ON ORIGINAL DOCUMENT
0 1 2 3

NO.	DATE	BY	REC.

BROWN AND CALDWELL

DESIGNED BY	RPA
DESIGN CHECKED BY	RNS
DRAWN BY	KB
SR. PROJ ENGR. R.P.E. NO.	C35503
APPROVED	
PRINCIPAL IN CHARGE, R.P.E. NO.	

EBMUD REVIEW
PROJECT ENGR. R.P.E. NO.
PROJECT MGR: DONALD KIANG R.P.E. NO. C 29341
RECOMMENDED SR. ENGR. OLUJIMI YOLOYE R.P.E. NO. C 44270

EAST BAY MUNICIPAL UTILITY DISTRICT
SPECIAL DISTRICT No. 1
OAKLAND, CALIFORNIA

MWWTP
DIGESTER HEATING SYSTEM IMPROVEMENTS
ELECTRICAL
CONSTRUCTION DETAILS

FACILITY: MWWTP	DRAWING No. SD274-E-003
SCALE: NO SCALE	
DATE: APRIL 2003	SHEET 25 OF 44

SPECIFICATION NO: SD274

EXISTING MCC P5B LOADSTUDY - 1200A BUS

DESCRIPTION	HP	FLA	NONCONT LOAD	CONT LOAD
MOTOR LOADS				
GAS COMPRESSOR	7.5	11.0	0.0	11.0
DIGESTED SLUDGE PUMP NO. 1	20.0	27.0	0.0	27.0
DIGESTED SLUDGE PUMP NO. 2	20.0	27.0	0.0	27.0
DIGESTER NO. 8 MIXING PUMP	75.0	96.0	0.0	96.0
SLUDGE HEATING RECIRC PUMP NO. 8	30.0	40.0	0.0	40.0
GAS RECIRC COMPRESSOR NO. S-1	20.0	27.0	0.0	27.0
GAS RECIRC COMPRESSOR NO. S-2	20.0	27.0	0.0	27.0
SLUDGE HEATING RECIRC PUMP NO. 6	30.0	40.0	0.0	40.0
GAS RECIRC COMPRESSOR NO. 8B	20.0	27.0	0.0	27.0
ALUM SLUDGE RECEIVING STATION	30.0	40.0	40.0	0.0
SLUDGE HEATING RECIRC PUMP NO. 4	30.0	40.0	0.0	40.0
GAS RECIRC COMPRESSOR NO. 6A	20.0	27.0	0.0	27.0
BLOWER BL-2	5.0	7.6	0.0	7.6
SLUDGE HEATING RECIRC PUMP NO. 3	30.0	40.0	0.0	40.0
GAS RECIRC COMPRESSOR NO. 4B	20.0	27.0	0.0	27.0
BLOWER BL-1	5.0	7.6	0.0	7.6
SLUDGE HEATING RECIRC PUMP NO. 2	30.0	40.0	0.0	40.0
STANDBY GAS RECIRC COMPRESSOR	20.0	27.0	0.0	27.0
PRIMARY HOT WATER PUMP 1	125	156	0.0	156
PRIMARY HOT WATER PUMP 2 (STBY)	125			
CONNECTED MOTOR HORSEPOWER	682.5			
CONNECTED MOTOR AMPERES		734.2		
NONCONTINUOUS MOTOR AMPERES			67.0	
CONTINUOUS MOTOR AMPERES				667.2
NON-MOTOR LOADS				
MAIN LIGHTING PANEL (KVA)	15.0	18.0	0.0	18.0
CONNECTED NON-MOTOR AMPERES		18.0		
NONCONTINUOUS NON-MOTOR LOADS			0.0	
CONTINUOUS NON-MOTOR LOADS				18.0

SWGR SIZING

TOTAL CONT MOTOR AMPERES + 25% LARGE MOTOR	773.2
PLUS CONT NON-MOTOR AMPERES	18.0
MINIMUM SWGR BUS CAPACITY	791.2

EXISTING MCC P22 LOADSTUDY - 600A BUS

DESCRIPTION	HP	FLA	NONCONT LOAD	CONT LOAD
MOTOR LOADS				
SLUDGE TRANSFER PUMP NO. 09010	25.0	34.0	0.0	34.0
SLUDGE TRANSFER PUMP NO. 10010	25.0	34.0	0.0	34.0
SLUDGE TRANSFER PUMP NO. 11010	25.0	34.0	0.0	34.0
SLUDGE TRANSFER PUMP NO. 12010	25.0	34.0	0.0	34.0
DUPLEX SUMP PUMP SP-4A	3.0	4.8	4.8	0.0
DUPLEX SUMP PUMP SP-4B	3.0	4.8	4.8	0.0
EXHAUST FAN EF5	5.0	7.6	0.0	7.6
AIR COMPRESSOR 1	40.0	52.0	52.0	0.0
SUMP PUMP SP-6	3.0	4.8	4.8	0.0
CONNECTED MOTOR HORSEPOWER	154.0			
CONNECTED MOTOR AMPERES		210.0		
NONCONTINUOUS MOTOR AMPERES			66.4	
CONTINUOUS MOTOR AMPERES				143.6
NON-MOTOR LOADS				
MAIN LIGHTING PANEL MCC P22	15.0	18.0	0.0	18.0
CONNECTED NON-MOTOR AMPERES		18.0		
NONCONTINUOUS NON-MOTOR LOADS			0.0	
CONTINUOUS NON-MOTOR LOADS				18.0

SWGR SIZING

TOTAL CONT MOTOR AMPERES + 25% LARGE MOTOR	223.0
TOTAL NON PLUS CONT NON-MOTOR AMPERES	18.0
MINIMUM SWGR BUS CAPACITY	241.0

BY CONSULTANT
29-JUL-2003 16:44
P:\cad\s23011-EBMUD\sANewDGN\s274e020.R00

REGISTERED PROFESSIONAL ENGINEER
TRACY MARIE STEVENS
No. C35503
Exp. 09-30-03
CIVIL
STATE OF CALIFORNIA

REGISTERED PROFESSIONAL ENGINEER
ROGER P. ANDERSON
No. 11592
Exp. 9-30-04
STATE OF CALIFORNIA

3" ON ORIGINAL DOCUMENT
0 1 2 3

NO.	DATE		BY	REC.

BROWN AND CALDWELL

DESIGNED BY	RPA
DESIGN CHECKED BY	RNS
DRAWN BY	KB
SR. PROJ ENGR. R.P.E. NO.	C35503
APPROVED	
PRINCIPAL IN CHARGE, R.P.E. NO.	

EBMUD REVIEW

PROJECT ENGR. R.P.E. NO.

PROJECT MGR. DONALD KIANG R.P.E. NO. C 29341

RECOMMENDED SR. ENGR. OLUJINI YOLOYE R.P.E. NO. C 44278

EAST BAY MUNICIPAL UTILITY DISTRICT
SPECIAL DISTRICT No. 1
OAKLAND, CALIFORNIA

MWWTP
DIGESTER HEATING SYSTEM IMPROVEMENTS
ELECTRICAL
MCC P5B AND
MCC P22 LOADSTUDY

FACILITY: MWWTP	DRAWING No. SD274-E-020
SCALE: NO SCALE	
DATE: APRIL 2003	SHEET 26 OF 44

SPECIFICATION NO: SD274

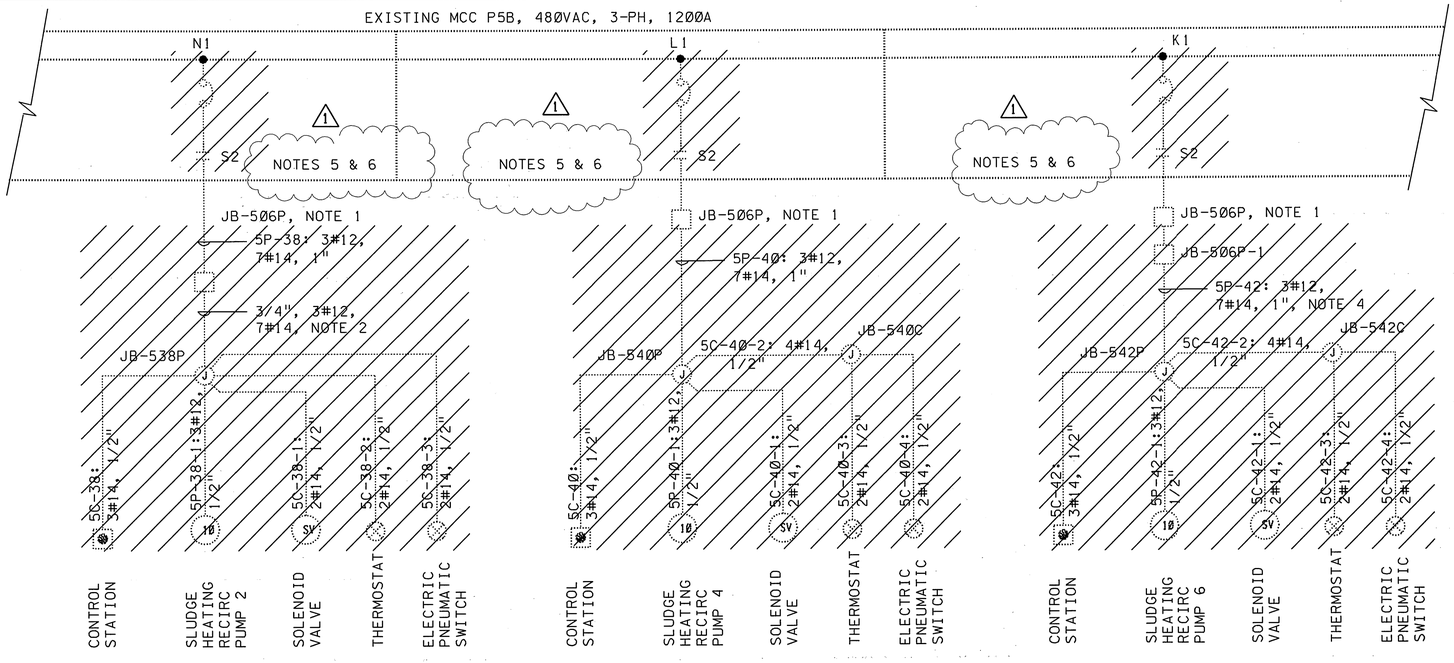

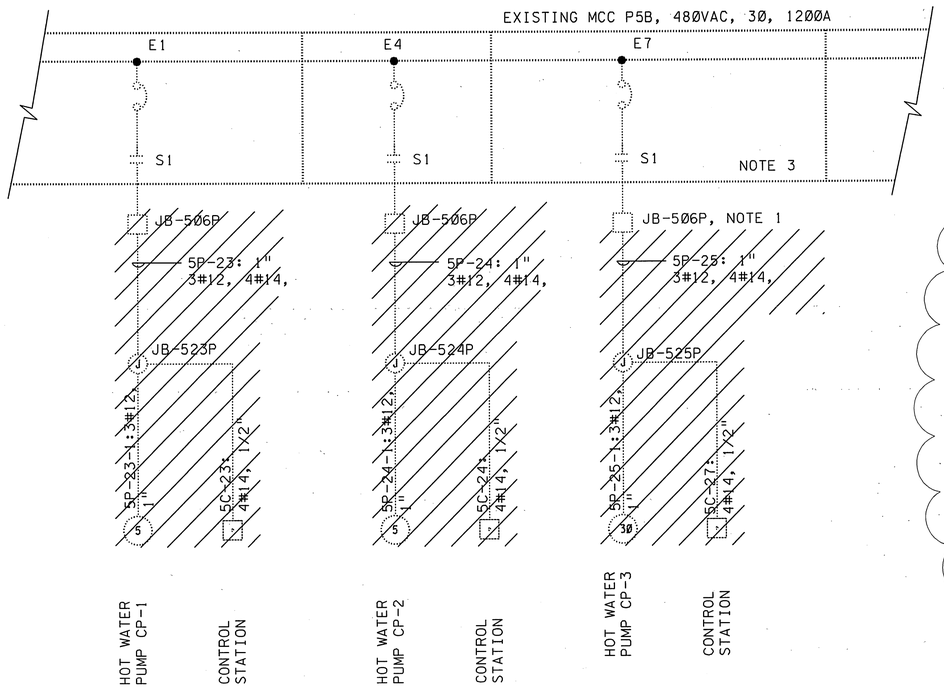

NOTES:

1. REMOVE WIRES BETWEEN EQUIPMENT AND JB-506P. REPAIR CONDUIT HOLE IN JB-506P WITH PENNY PLUG. CUT AND TAPE THE WIRES FOR EACH CIRCUIT AND TY-WRAP TOGETHER AND LABEL BUNDLE AT JB-506P.
2. CONTRACTOR MAY REUSE PORTION OF EXISTING CONDUIT TO EACH PUMP, CUT CONDUIT AT FIRST COUPLING CLOSEST TO JB-506P AT ONE END AND CLOSE TO EQUIPMENT AT OTHER END AND EXTEND NEW CONDUIT AS SHOWN ON DWG E22.
3. SEE NOTES 2/E31
4. THE ACTUAL CONDUIT ROUTE IS EMBEDDED NEAR THE EQUIPMENT. ABANDON THIS AND PROVIDE NEW CONDUIT AND WIRE PER DRAWING E22.
5. DISCONNECT WIRES AND REMOVE STARTER TO MAKE ROOM FOR NEW STARTER. RETURN STARTER TO OWNER.
6. DO NOT REMOVE OR DESTROY SIGNAL WIRING THAT IS PART OF OWNER'S SCADA SYSTEM.

BY CONSULTANT
29-JUL-2003 17:45
P:\scad\23011-EBMUD\4NewDGN\2746021.R01

REGISTERED PROFESSIONAL ENGINEER TRACY MARIE STICKERS No. C35503 Exp. 09-30-03 CIVIL STATE OF CALIFORNIA

REGISTERED PROFESSIONAL ENGINEER ROGER P. ANDERSON No. 11592 Exp. 9-30-04 STATE OF CALIFORNIA

3" ON ORIGINAL DOCUMENT
0 1 2 3

NO.	DATE		BY	REC.
1	05-03	ADDENDUM No. 1	RPA	

BROWN AND CALDWELL

DESIGNED BY	RPA
DESIGN CHECKED BY	RNS
DRAWN BY	KB
SR. PROJ ENGR. R.P.E. NO.	C35503
APPROVED	
PRINCIPAL IN CHARGE, R.P.E. NO.	

EBMUD REVIEW

PROJECT ENGR. R.P.E. NO.

PROJECT MGR. DONALD KIANG R.P.E. NO. C 29341

RECOMMENDED SR. ENGR. OLUJIMI YOLOYE R.P.E. NO. C 44278

EAST BAY MUNICIPAL UTILITY DISTRICT
SPECIAL DISTRICT No. 1
OAKLAND, CALIFORNIA

MWWTP
DIGESTER HEATING SYSTEM IMPROVEMENTS
ELECTRICAL
MCC P5B SINGLE LINE DIAGRAM
DEMOLITION

FACILITY: MWWTP	DRAWING No. SD274-E-021
SCALE: NO SCALE	
DATE: APRIL 2003	SHEET 27 OF 44

SPECIFICATION NO: SD274

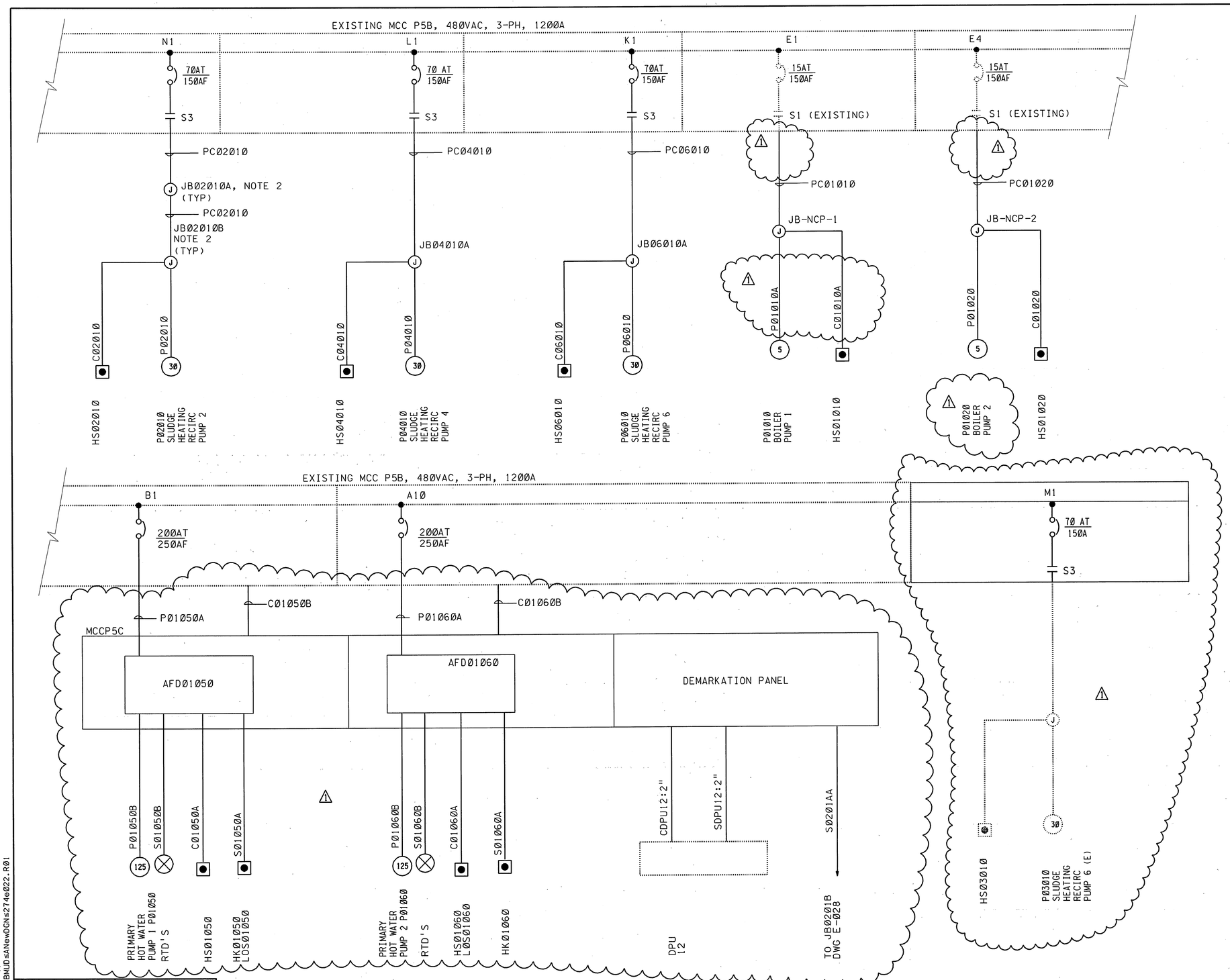

NOTES:
1. NOT USED.
2. JUNCTION BOXES SHALL BE GUB TYPE. AREA IS CLASS I DIV 2 GROUP D AND CONDUITS LEAVING AREA SHALL BE PROVIDED WITH EYS TYPE SEALS.

BY CONSULTANT
29-JUL-2003 17:47
P:\scad\23011-EBMUD\ANewDGN\274e022.R01

REGISTERED PROFESSIONAL ENGINEER TRACY MARIE STIGERS No. C35503 Exp. 09-30-03 CIVIL STATE OF CALIFORNIA

REGISTERED PROFESSIONAL ENGINEER ROGER P. ANDERSON No. 11592 Exp. 9-30-04 STATE OF CALIFORNIA

3" ON ORIGINAL DOCUMENT
0 1 2 3

NO.	DATE		BY	REC.
1	5/03	ADDENDUM No. 1	RPA	

BROWN AND CALDWELL

DESIGNED BY RPA
DESIGN CHECKED BY RNS
DRAWN BY KB
SR. PROJ ENGR. R.P.E. NO. C35503
APPROVED
PRINCIPAL IN CHARGE, R.P.E. NO.

EBMUD REVIEW
PROJECT ENGR. R.P.E. NO.
PROJECT MGR. DONALD KIANG R.P.E. NO. C 29341
RECOMMENDED SR. ENGR. OLUJIMI YOLOYE R.P.E. NO. C 44278

EAST BAY MUNICIPAL UTILITY DISTRICT
SPECIAL DISTRICT No. 1
OAKLAND, CALIFORNIA

MWWTP
DIGESTER HEATING SYSTEM IMPROVEMENTS
ELECTRICAL
MCC P5B SINGLE LINE DIAGRAM
MODIFICATION

FACILITY: MWWTP
SCALE: NO SCALE
DATE: APRIL 2003
DRAWING No. SD274-E-022
SHEET 28 OF 44
SPECIFICATION NO: SD274

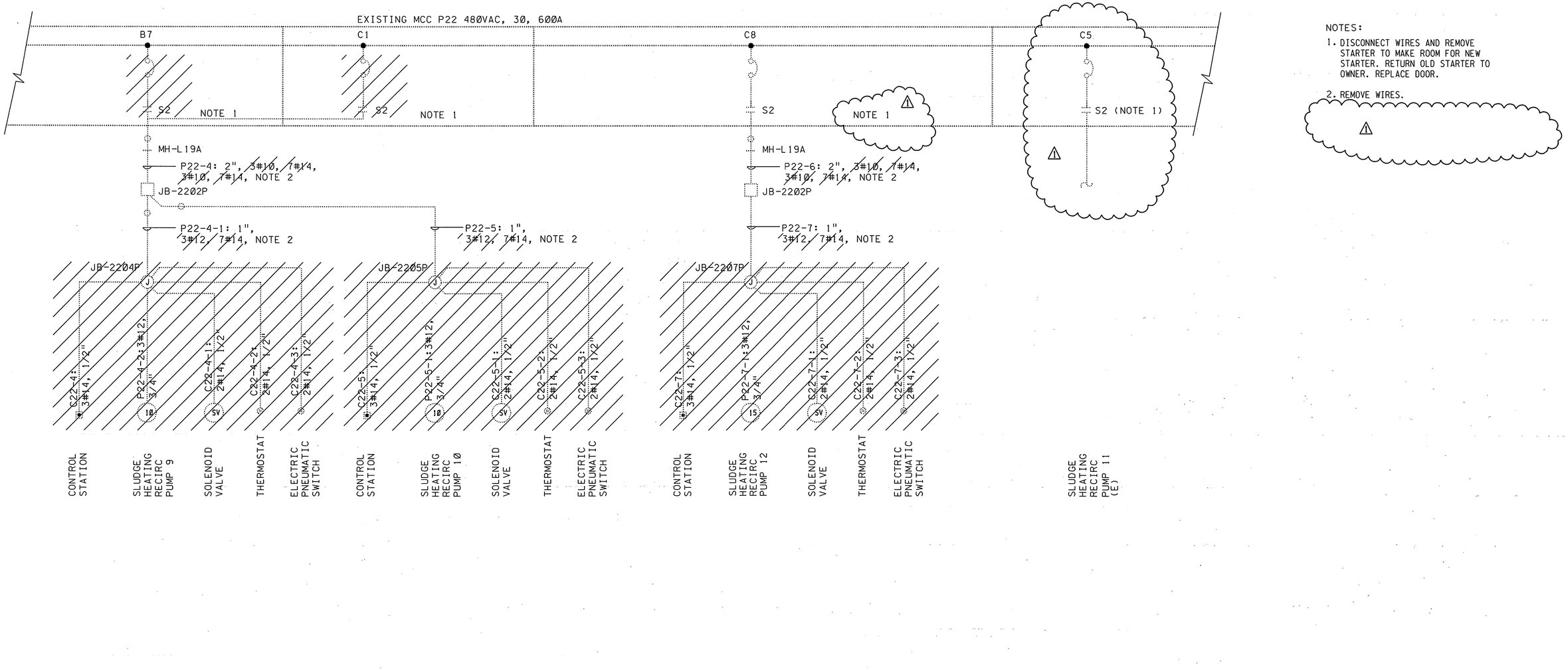

NOTES:

1. DISCONNECT WIRES AND REMOVE STARTER TO MAKE ROOM FOR NEW STARTER. RETURN OLD STARTER TO OWNER. REPLACE DOOR.
2. REMOVE WIRES.

BY CONSULTANT
29-JUL-2003 17:48
P:\cad\23011-EBMUD\ANewDGN\s274e025.R01

REGISTERED PROFESSIONAL ENGINEER
TRACY MARIE SYDERS
No. C35503
Exp. 09-30-03
CIVIL
STATE OF CALIFORNIA

REGISTERED PROFESSIONAL ENGINEER
ROGER P. ANDERSON
No. 11592
Exp. 9-30-04
STATE OF CALIFORNIA

3" ON ORIGINAL DOCUMENT
0 1 2 3

NO.	DATE		BY	REC.
1	5/03	ADDENDUM No.1	RPA	

BROWN AND CALDWELL

DESIGNED BY	RPA
DESIGN CHECKED BY	RNS
DRAWN BY	KB
SR. PROJ ENGR. R.P.E. NO.	C35503
APPROVED	
PRINCIPAL IN CHARGE, R.P.E. NO.	

EBMUD REVIEW

PROJECT ENGR. R.P.E. NO.

PROJECT MGR. DONALD KIANG R.P.E. NO. C 29341

RECOMMENDED SR. ENGR. OLUJIMI YOLOYE R.P.E. NO. C 44278

EAST BAY MUNICIPAL UTILITY DISTRICT
SPECIAL DISTRICT No. 1
OAKLAND, CALIFORNIA

MWWTP
DIGESTER HEATING SYSTEM IMPROVEMENTS
ELECTRICAL
MCC P22 SINGLE LINE DIAGRAM
DEMOLITION

FACILITY: MWWTP	DRAWING No. SD274-E-025
SCALE: NO SCALE	
DATE: APRIL 2003	SHEET 29 OF 44

SPECIFICATION NO: SD274

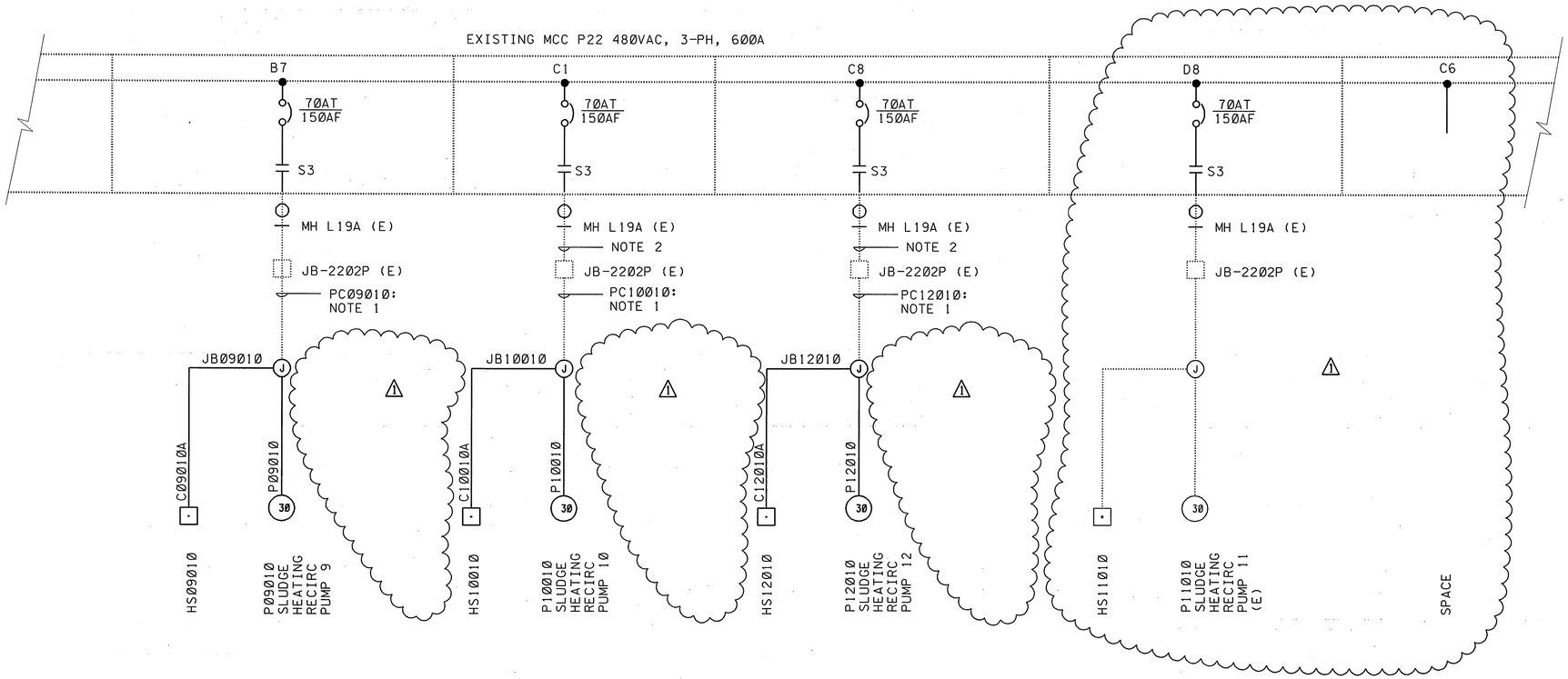

NOTES:

1. REUSE AND RETAG CONDUIT AS SHOWN.
2. USE A SPARE 2" CONDUIT, SEE NOTE 2/E32.

BY CONSULTANT
29-JUL-2003 17:49
P:\cad\230111-EBMUD\ANewDGN\2746026.R01

REGISTERED PROFESSIONAL ENGINEER
TRACY MARIE STEERS
No. C35503
Exp. 09-30-03
CIVIL
STATE OF CALIFORNIA

REGISTERED PROFESSIONAL ENGINEER
ROGER P. ANDERSON
No. 11592
Exp. 9-30-04
STATE OF CALIFORNIA

3" ON ORIGINAL DOCUMENT
0 1 2 3

NO.	DATE		BY	REC.
1	05-03	ADDENDUM No. 1	RPA	

BROWN AND CALDWELL

DESIGNED BY	RPA
DESIGN CHECKED BY	RNS
DRAWN BY	KB
SR. PROJ ENGR. R.P.E. NO.	C35503
APPROVED	
PRINCIPAL IN CHARGE, R.P.E. NO.	

EBMUD REVIEW

PROJECT ENGR. R.P.E. NO.

PROJECT MGR. DONALD KIANG R.P.E. NO. C 29341

RECOMMENDED SR. ENGR. OLUJIMI YOLOYE R.P.E. NO. C 44278

EAST BAY MUNICIPAL UTILITY DISTRICT
SPECIAL DISTRICT No. 1
OAKLAND, CALIFORNIA

MWWTP
DIGESTER HEATING SYSTEM IMPROVEMENTS
ELECTRICAL
MCC P22 SINGLE LINE DIAGRAM
MODIFICATION

FACILITY: MWWTP	DRAWING No. SD274-E-026
SCALE: NO SCALE	SHEET 30 OF 44
DATE: APRIL 2003	

SPECIFICATION NO: SD274

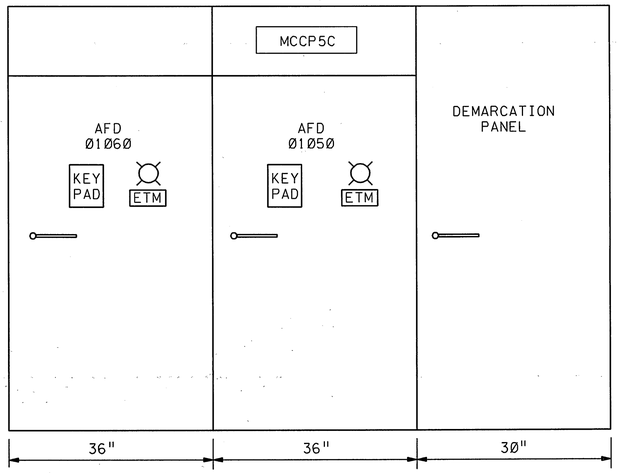

MCC P5C-FRONT ELEVATION

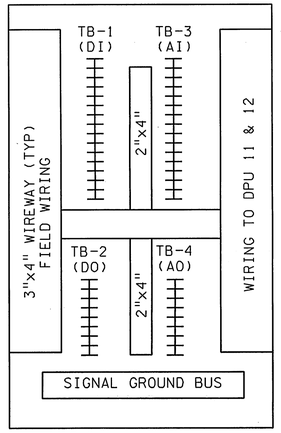

DEMARCATION PANEL
INTERIOR

NOTES:

1. USE SPARE 2" CONDUIT. SEE NOTE 2/E032.
2. PROVIDE NEMA 7 ENCLOSURE.

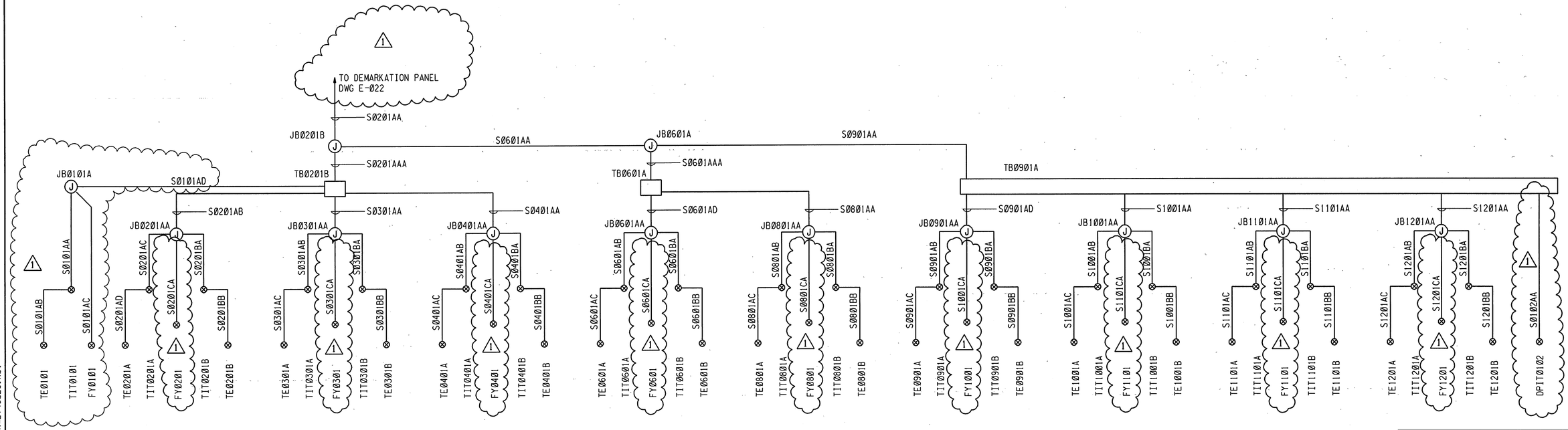

BY CONSULTANT
29-JUL-2003 17:51
P:\scad\s23011-EBMUD\ANewDGN\s2746e028.R01

REGISTERED PROFESSIONAL ENGINEER
TRACY MARIE STICKERS
No. C35503
Exp. 09-30-03
CIVIL
STATE OF CALIFORNIA

REGISTERED PROFESSIONAL ENGINEER
ROGER P. ANDERSON
No. 11592
Exp. 9-30-04
STATE OF CALIFORNIA

3" ON ORIGINAL DOCUMENT
0 1 2 3

NO.	DATE		BY	REC.
1	5/03	ADDENDUM No. 1	RPA	

BROWN AND CALDWELL

DESIGNED BY	RPA
DESIGN CHECKED BY	RNS
DRAWN BY	KB
SR. PROJ ENGR. R.P.E. NO.	C35503
APPROVED	
PRINCIPAL IN CHARGE, R.P.E. NO.	

EBMUD REVIEW

PROJECT ENGR. R.P.E. NO.

PROJECT MGR. DONALD KIANG R.P.E. NO. C 29341

RECOMMENDED SR. ENGR. OLUJIMI YOLOYE R.P.E. NO. C 44278

EAST BAY MUNICIPAL UTILITY DISTRICT
SPECIAL DISTRICT No. 1
OAKLAND, CALIFORNIA

MWWTP
DIGESTER HEATING SYSTEM IMPROVEMENTS
ELECTRICAL
MISCELLANEOUS SINGLE LINE DIAGRAM
AND MCC P5C LAYOUT

FACILITY: MWWTP	DRAWING No. SD274-E-028
SCALE: NO SCALE	
DATE: APRIL 2003	SHEET 32 OF 44

SPECIFICATION NO: SD274

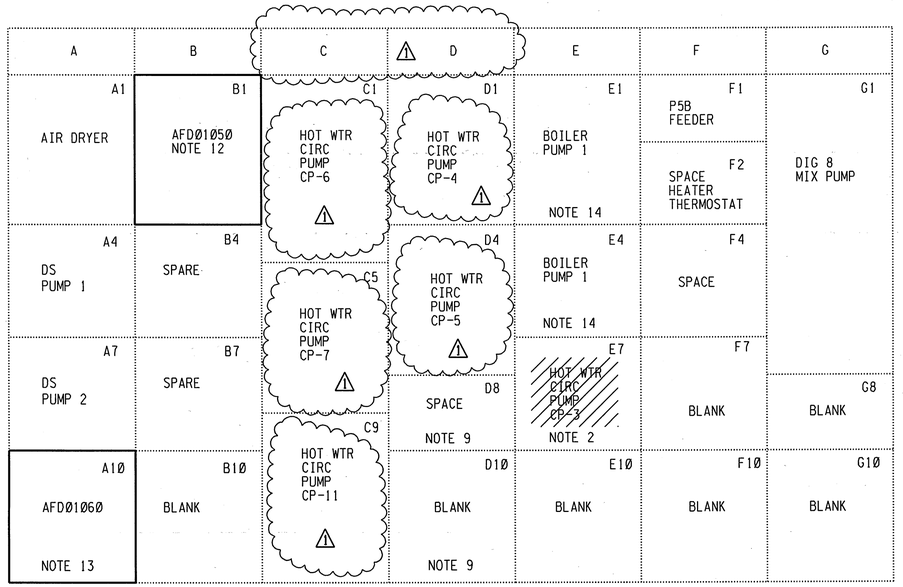

EXISTING MCC P5B FRONT ELEVATION
(GE 7700 LINE NO. 201B7106)

EXISTING MCC P5B REAR ELEVATION

NOTES:

1. SEE SITE LAYOUT DRAWING M100 FOR LOCATION. AREA IS EXISTING AND LOCATION OF EQUIPMENT IS APPROXIMATE AND NOT ALL EQUIPMENT IS SHOWN.
2. DISCONNECT WIRES AND SPARE STARTER AND PROVIDE BLANK DOOR LABELED "SPARE".
3. NOT USED. ⚠1
4. AFTER THE BOILER HAS BEEN REMOVED AND FLOORING RESTORED, PROVIDE A 1-INCH SLOPING EDGE PAD FOR THE NEW MCC.
5. SEE NOTE 5/E21. PROVIDE NEW CIRCUIT BREAKER STARTER PER DIAGRAM E51B. PROVIDE NEW DOOR AND LABEL AS SHOWN ON E51B. ⚠1
6. CORE BORE FOR AFD CONDUITS. CORE BORE LOCATIONS SHALL BE COORDINATED WITH CONDUIT LOCATIONS BELOW IN THE GALLERY. PROVIDE LB CONDULETS AND EYS TYPE SEALS. XRAY FLOOR BEFORE CORE BORE.
7. RELOCATE STARTERS TO THE POSITIONS SHOWN. REMOVE SPARE STARTERS AND RETURN TO OWNER. PROVIDE BLANK COVERS WHERE NECESSARY. EXISTING LOCATION OF N10 IS J4. EXISTING LOCATION OF N7 IS L4. ⚠1
8. CORE BORE CONDUITS. CORE BORE LOCATIONS SHALL BE COORDINATED WITH CONDUIT LOCATIONS BELOW IN THE GALLERY. PROVIDE LB CONDULETS AND EYS TYPE SEALS. XRAY FLOOR BEFORE CORE BORE.
9. REMOVE DOOR AND REPLACE WITH NEW BLANK DOOR (YELLOW).
10. NOT USED. ⚠1
11. SEE NOTES 3 AND 7 DRAWING E101.
12. REMOVE SPARE STARTER AND RETURN TO OWNER. PROVIDE NEW CIRCUIT BREAKER IN NEW BUCKET AND DOOR.
13. PROVIDE NEW CIRCUIT BREAKER AND NEW DOOR. PROVIDE NEW NAMEPLATE.
14. PROVIDE NEW NAMEPLATE.
15. PRIOR TO CORE BOARING THE FLOOR AREA SHALL BE XRAYED. DO NOT DAMAGE REINFORCING STEEL OR EMBEDDED CONDUITS.
16. DO NOT REMOVE OR DESTROY SIGNAL WIRING THAT IS PART OF THE OWNER'S SCADA SYSTEM. RECONNECT THIS WIRING WHERE NOTED ON CONTROL DIAGRAM E51C.

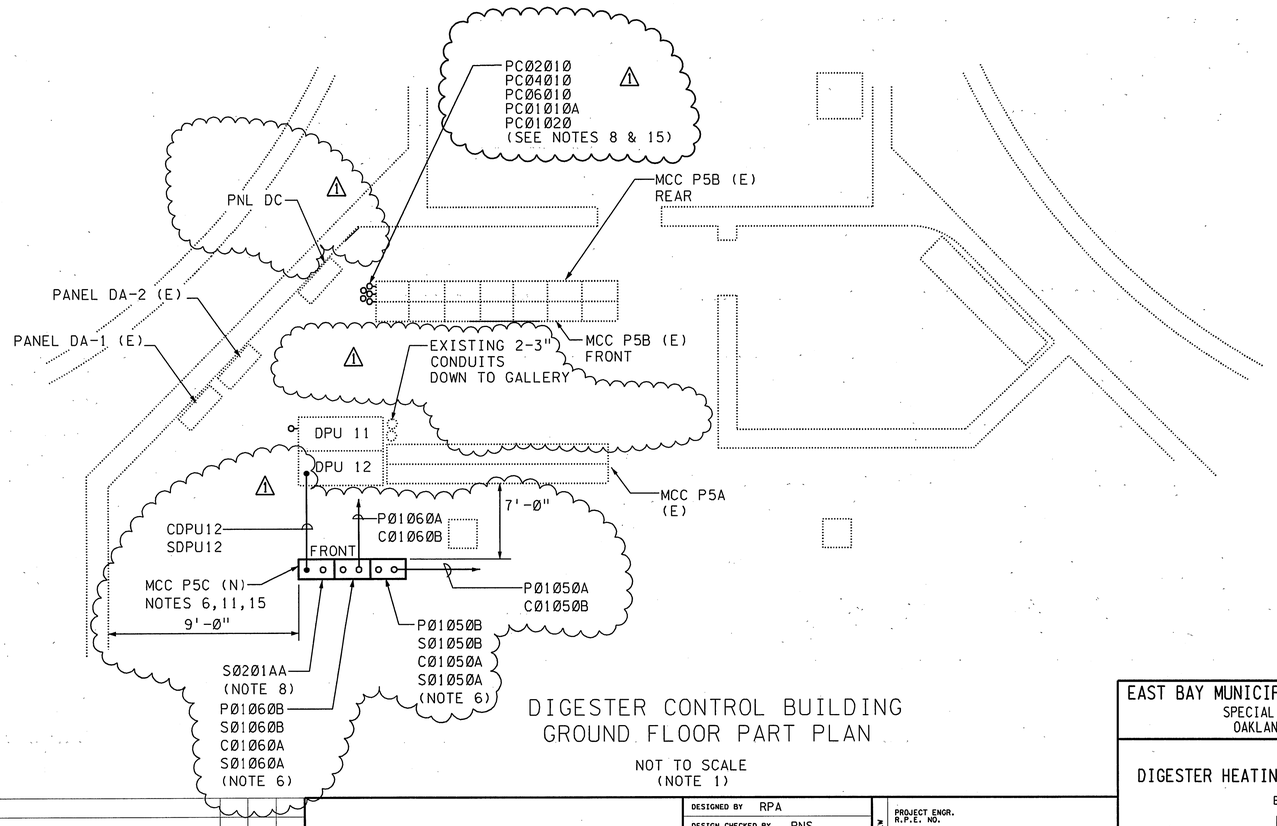

DIGESTER CONTROL BUILDING
GROUND FLOOR PART PLAN

NOT TO SCALE
(NOTE 1)

BY CONSULTANT
29-JUL-2003 17:53
P:\scads23011-EBMUD\SANewDGN\s274e031.R01

REGISTERED PROFESSIONAL ENGINEER
TRACY MARIE STICKNEY
No. C35503
Exp. 09-30-03
CIVIL
STATE OF CALIFORNIA

REGISTERED PROFESSIONAL ENGINEER
ROGER P. ANDERSON
No. 11592
Exp. 9-30-04
STATE OF CALIFORNIA

3" ON ORIGINAL DOCUMENT
0 1 2 3

NO.	DATE		BY	REC.
⚠1	5/03	ADDENDUM No. 1	RPA	

BROWN AND CALDWELL

DESIGNED BY	RPA
DESIGN CHECKED BY	RNS
DRAWN BY	KB
SR. PROJ ENGR. R.P.E. NO.	C35503
APPROVED	
PRINCIPAL IN CHARGE, R.P.E. NO.	

EBMUD REVIEW
PROJECT ENGR. R.P.E. NO.
PROJECT MGR. DONALD KIANG R.P.E. NO. C 29341
RECOMMENDED SR. ENGR. OLUJIMI YOLOYE R.P.E. NO. C 44278

EAST BAY MUNICIPAL UTILITY DISTRICT
SPECIAL DISTRICT No. 1
OAKLAND, CALIFORNIA

MWWTP
DIGESTER HEATING SYSTEM IMPROVEMENTS
ELECTRICAL
MCC P5B
PART PLAN AND ELEVATIONS MODIFICATION

FACILITY: MWWTP	DRAWING No. SD274-E-031
SCALE: NO SCALE	
DATE: APRIL 2003	SHEET 33 OF 44

SPECIFICATION NO: SD274

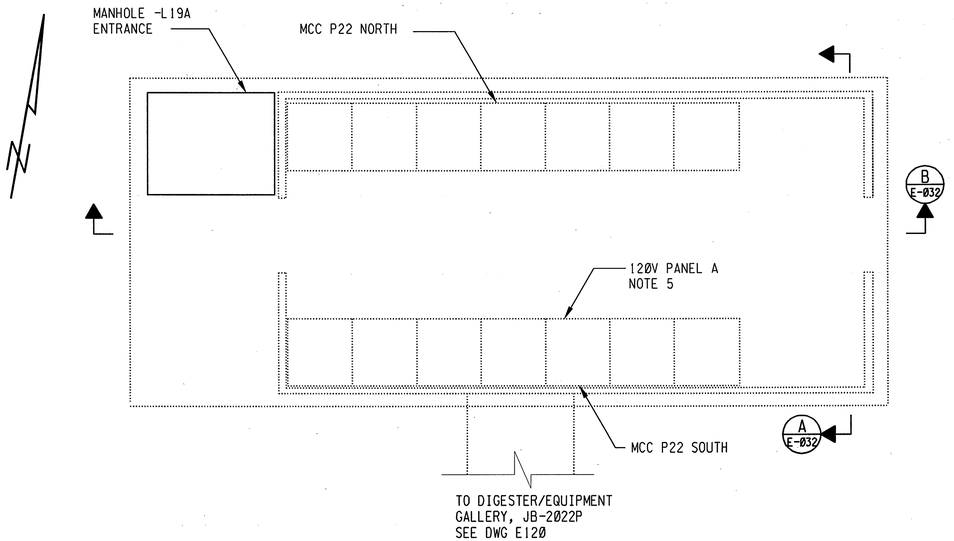

NOTES:

1. SEE SITE LAYOUT DRAWING M100 FOR LOCATION OF MCC P22 ENCLOSURE.
2. THERE ARE 6-2" SPARE CONDUITS IN DUCT BANK TO EQUIPMENT GALLERY 2 AND JB-2022P.
3. SEE NOTE 1/E025. PROVIDE NEW 30" STARTER PER DIAGRAM E51B. ⚠1 PROVIDE NEW DOOR AND LABEL AS SHOWN ON DIAGRAM E51B.
4. SEE SINGLE LINE DRAWINGS AND RACEWAY AND CABLE SCHEDULE DRAWING FOR RACEWAY AND CABLE REQUIREMENTS.
5. 120/208V PANEL HAS THE FOLLOWING SPARE CIRCUITS 25 THRU 30 (30 CIRCUIT PANEL).
6. REMOVE EXISTING STARTERS AND LOCATE NEW STARTERS IN THE LOCATION SHOWN. ⚠1
7. PROVIDE YELLOW DOOR OVER BLANK AREA.

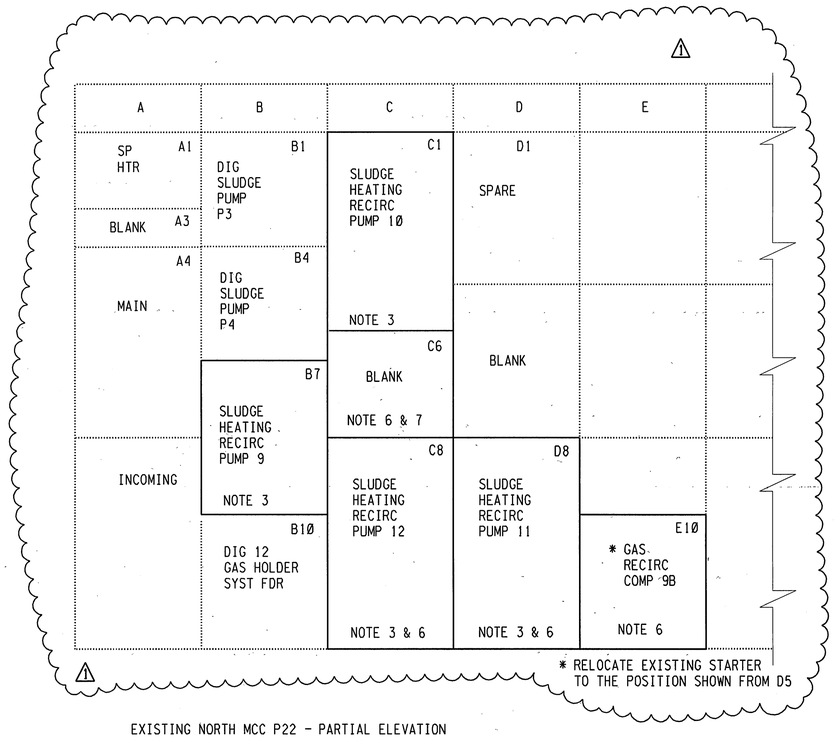

EXISTING NORTH MCC P22 - PARTIAL ELEVATION

(GE 7700 LINE NO. 427X155M03)

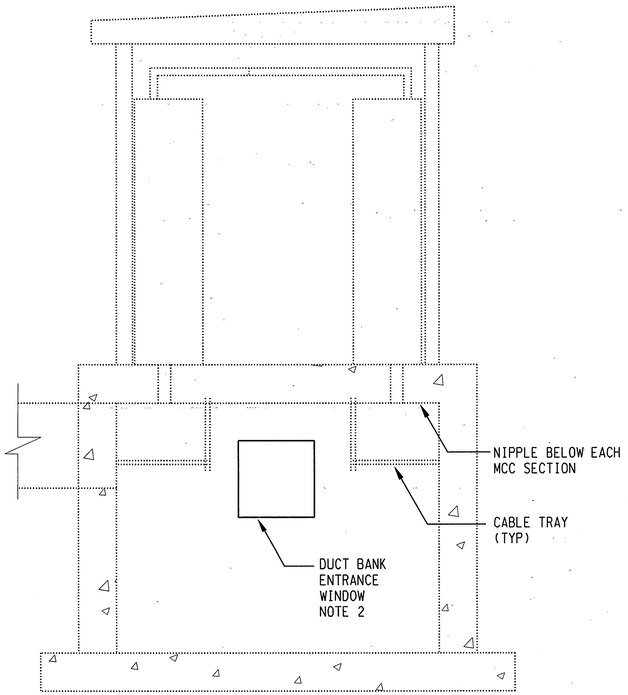

SECTION A / E-032

NO SCALE

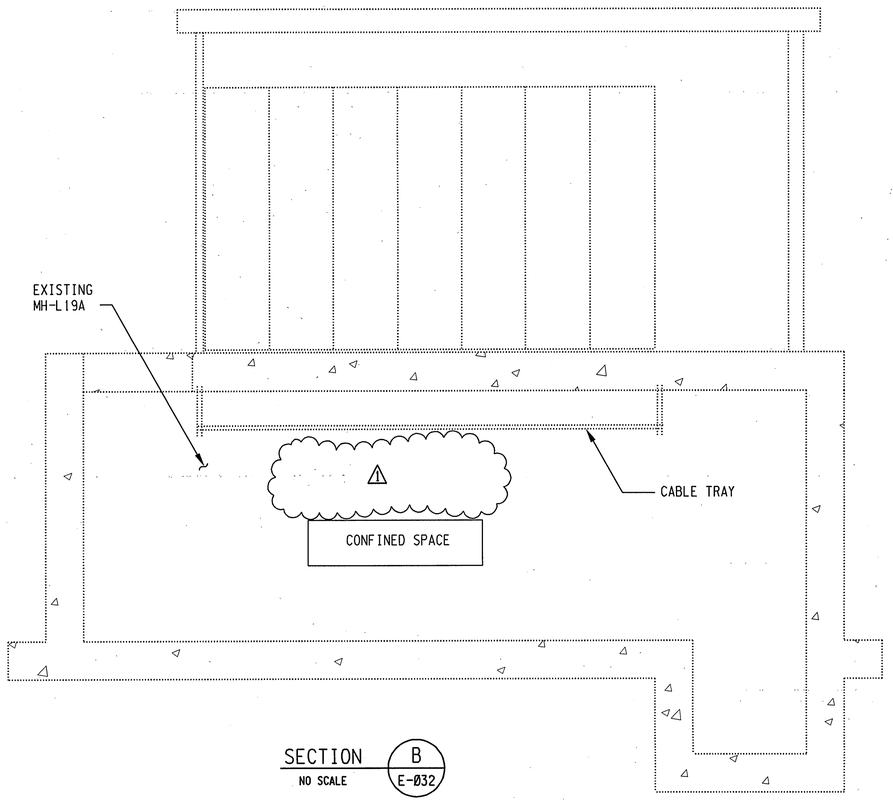

SECTION B / E-032

NO SCALE

REGISTERED PROFESSIONAL ENGINEER — TRACY MARIE SYDERS — No. C35503 — Exp. 09-30-03 — CIVIL — STATE OF CALIFORNIA

REGISTERED PROFESSIONAL ENGINEER — ROGER P. ANDERSON — No. 11592 — Exp. 9-30-04 — STATE OF CALIFORNIA

3" ON ORIGINAL DOCUMENT

0 1 2 3

NO.	DATE		BY	REC.
⚠3	05-03	ADDENDUM No. 1	RPA	

BROWN AND CALDWELL

DESIGNED BY RPA
DESIGN CHECKED BY RNS
DRAWN BY KB
SR. PROJ ENGR. R.P.E. NO. C35503
APPROVED
PRINCIPAL IN CHARGE, R.P.E. NO.

EBMUD REVIEW
PROJECT ENGR. R.P.E. NO.
PROJECT MGR. DONALD KIANG R.P.E. NO. C 29341
RECOMMENDED SR. ENGR. OLUWMI YOLOYE R.P.E. NO. C 44278

EAST BAY MUNICIPAL UTILITY DISTRICT
SPECIAL DISTRICT No. 1
OAKLAND, CALIFORNIA

MWWTP
DIGESTER HEATING SYSTEM IMPROVEMENTS
ELECTRICAL
MCC P22 PLAN, SECTIONS AND ELEVATION
MODIFICATION

FACILITY: MWWTP
SCALE: NO SCALE
DATE: APRIL 2003

DRAWING No. SD274-E-032
SHEET 34 OF 44

SPECIFICATION NO: SD274

BY CONSULTANT
29-JUL-2003 17:55
P:\acad\23011-EBMUD\ANewDGN\E274e032.R01

CONDUIT	FROM	TO	SIZE	TYPE	CONTAINS	VIA/REMARKS	DWG
C01050A	AFD01050	HS01050	0.75	GRS	4#14		E-022
C01050B	MCC P5B	AFD01050	0.75	GRS	8#14	ROUTE OVERHEAD	E-022
P01050A	MCC P5B	AFD01050	2.50	GRS	3#4/0, #2G	AFD01050 LOC IN MCC P5C (TYP)	E-022
P01050B	AFD01050	P01050	2.50	GRS	3#4/0, #2G		E-022
S01050A	AFD01050	HK01050	.75	GRS	1TR#16		E-022
S01050B	AFD01050	RTD'S	1.25	GRS	3TR#16		E-022
							E-022
C01060A	AFD01060	HS01060	0.75	GRS	4#14		E-022
C01060B	MCC P5B	AFD01060	0.75	GRS	8#14	ROUTE OVERHEAD	E-022
P01060A	MCC P5B	AFD01060	2.50	PVC	3#4/0, #2G	AFD01060 LOC IN MCC P5C	E-022
P01060B	AFD01060	P01060	2.50	PVC	3#4/0, #2G		E-022
S01060A	AFD01060	HK01060	.75	PGRS	1TR#16		E-022
S01060B	AFD01060	RTD'S	1.25	PGRS	3TR#16		E-022
C02010	JB02010B	HS02010	0.75	GRS	4#14		E-022
P02010	JB02010B	P02010	1.25	GRS	3#6, #8G		E-022
PC02010	MCC P5B	JB02010B	1.50	GRS	3#6, #8G, 4#14	JB02010A, NOTE 2/E21	E-022
C04010	JB04010A	HS04010	0.75	GRS	4#14		E-022
P04010	JB04010A	P04010	1.25	GRS	3#6, #8G		E-022
PC04010	MCC P5B	JB04010A	1.50	GRS	3#6, #8G, 4#14		E-022
C06010	JB06010A	HS06010	0.75	GRS	4#14		E-022
P06010	JB06010A	P06010	1.25	GRS	3#6, #8G		E-022
PC06010	MCC P5B	JB06010A	1.50	GRS	3#6, #8G, 4#14		E-022

CONDUIT	FROM	TO	SIZE	TYPE	CONTAINS	VIA/REMARKS	DWG
C09010A	JB09010	HS09010	0.75	GRS	4#14		E-026
P09010	JB09010	P09010	1.25	GRS	3#6, #8G		E-026
PC09010	MCC P22	JB09010			3#6, #8G, 6#14	EXIST CONDUIT VIA MHL19A, JB-2202P (E)	E-026
C10010A	JB10010	HS10010	0.75	GRS	4#14		E-026
P10010	JB10010	P10010	1.25	GRS	3#6, #8G		E-026
PC10010	MCC P22	JB10010			3#6, #8G, 6#14	EXIST CONDUIT VIA MHL19A, JB-2202P (E)	E-026
C12010A	JB12010	HS12010	0.75	GRS	4#14		E-026
P12010	JB12010	P12010	1.25	GRS	3#6, #8G		E-026
PC12010	MCC P22	JB12010			3#6, #8G, 6#14	EXIST CONDUIT VIA MHL19A, JB-2202P (E)	E-026
PC01010A	MCC P5B	JB-NCP-1	0.75	GRS	3#12, #12G, 4#14		E-022
C01010A	JB-NCP-1	HS01010	0.75	GRS	4#14		E-022
P01010A	JB-NCP-1	P01010	0.75	GRS	3#12, #12G		E-022
PC01020	MCC P5B	JB-NCP-2	0.75	GRS	3#12, #12G, 4#14		E-022
C01020	JB-NCP-2	HS-01020	0.75	GRS	4#14		E-022
P01020	JB-NCP-2	P01020	0.75	GRS	3#12, #12G		E-022
SDPU12	MCCP5C	DPU12	2.00	GRS	NONE	WIRE BY DISTRICT	E-022
CDPU12	MCCP5C	DPU12	2.00	GRS	NONE	WIRE BY DISTRICT	E-022

BY CONSULTANT
29-JUL-2003 17:59
P:\scada\23011-EBMUD\sANewDGN\274e036.R01

REGISTERED PROFESSIONAL ENGINEER
TRACY MARIE STEERS
No. C35503
Exp. 09-30-03
CIVIL
STATE OF CALIFORNIA

REGISTERED PROFESSIONAL ENGINEER
ROGER P. ANDERSON
No. 11592
Exp. 9-30-04
STATE OF CALIFORNIA

3" ON ORIGINAL DOCUMENT
0 1 2 3

NO.	DATE		BY	REC.
1	05-03	ADDENDUM No. 1	RPA	

BROWN AND CALDWELL

DESIGNED BY	RPA
DESIGN CHECKED BY	RNS
DRAWN BY	KB
SR. PROJ ENGR. R.P.E. NO.	C35503
APPROVED	
PRINCIPAL IN CHARGE, R.P.E. NO.	

EBMUD REVIEW

PROJECT ENGR. R.P.E. NO.

PROJECT MGR. DONALD KIANG R.P.E. NO. C 29341

RECOMMENDED SR. ENGR. OLUJIMI YOLOYE R.P.E. NO. C 44278

EAST BAY MUNICIPAL UTILITY DISTRICT
SPECIAL DISTRICT No. 1
OAKLAND, CALIFORNIA

MWWTP
DIGESTER HEATING SYSTEM IMPROVEMENTS
ELECTRICAL

CONDUIT AND CABLE SCHEDULE 1

FACILITY: MWWTP	DRAWING No. SD274-E-036
SCALE: NO SCALE	SHEET 36 OF 44
DATE: APRIL 2003	

SPECIFICATION NO: SD274

CONDUIT	FROM	TO	SIZE	TYPE	CONTAINS	VIA/REMARKS	DWG
S0101AA	JB0101AA	TIT0101	0.75	GRS	1PR#16		E-022
S0101AB	TIT0101	TE0101	0.75	GRS	1TR#16		E-022
S0102AA	TB0901A	DPIT0102	0.75	GRS	1PR#16		E-022
S0201AAA	JB0201B	TB0201B	1.5	GRS	1-16PR#16		E-028
S0201AA	MCC P5C	JB0201B	3.00	GRS	2-16PR#16, 1-24PR#16		E-028
S0201AB	TB0201B	JB0201AA	1.00	GRS	3PR#16		E-028
S0201AC	JB0201AA	TIT0201A	0.75	GRS	1PR#16		E-028
S0201AD	TIT0201A	TE0201A	0.75	GRS	1TR#16		E-028
S0201BA	JB0201AA	TIT0201B	0.75	GRS	1PR#16		E-028
S0201BB	TIT0201B	TE0201B	0.75	GRS	1TR#16		E-028
S0201CA	JB0201AA	FY0201	0.75	GRS	1PR#16		E-028
S0301AA	TB0201B	JB0301AA	1.00	GRS	3PR#16		E-028
S0301AB	JB0301AA	TIT0301A	0.75	GRS	1PR#16		E-028
S0301AC	TIT0301A	TE0301A	0.75	GRS	1TR#16		E-028
S0301BA	JB0301AA	TIT0301B	0.75	GRS	1PR#16		E-028
S0301BB	TIT0301B	TE0301B	0.75	GRS	1TR#16		E-028
S0301CA	JB0301AA	FY0301	0.75	GRS	1PR#16		E-028
S0401AA	TB0201B	JB0401AA	1.00	GRS	3PR#16		E-028
S0401AB	JB0401AA	TIT0401A	0.75	GRS	1PR#16		E-028
S0401AC	TIT0401A	TE0401A	0.75	GRS	1TR#16		E-028
S0401BA	JB0401AA	TIT0401B	0.75	GRS	1PR#16		E-028
S0401BB	TIT0401A	TE0401B	0.75	GRS	1TR#16		E-028
S0401CA	JB0401AA	FY0401	0.75	GRS	1PR#16		E-028
S0601AA	JB0201B	JB0601A	2.50	GRS	1-16PR#16, 1-24PR#16		E-028
S0601AAA	JB0601A	TB0601A	1.50	GRS	1-16PR#16		E-028
S0601AB	TIT0601A	JB0601AA	1.00	GRS	1PR#16		E-028
S0601AC	TIT0601A	TE0601A	0.75	GRS	1TR#16		E-028
S0601AD	TB0601A	JB0601AA	1.00	GRS	3PR#16		E-028
S0601BA	JB0601AA	TIT0601B	0.75	GRS	1PR#16		E-028
S0601BB	TIT0601B	TE0601B	0.75	GRS	1TR#16		E-028
S0601CA	JB0601AA	FY0601	0.75	GRS	1PR#16		E-028
S0801AA	TB0601A	JB0801AA	1.00	GRS	3PR#16		E-028
S0801AB	JB0801AA	TIT0801A	0.75	GRS	1PR#16		E-028
S0801AC	TIT0801A	TE0801A	0.75	GRS	1TR#16		E-028
S0801BA	JB0801AA	TIT0801B	0.75	GRS	1PR#16		E-028
S0801CA	JB0801AA	FY0801	0.75	GRS	1PR#16		E-028
S0801BB	TIT0801B	TE0801B	0.75	GRS	1TR#16		E-028
S0901AA	JB0601A	TB0901A	2.00	GRS	1-24PR#16		E-028
S0901AB	TIT0901A	JB0901AA	0.75	GRS	1PR#16		E-028
S0901AC	TIT0901A	TE0901A	0.75	GRS	1TR#16		E-028
S0901AD	TB0901A	JB0901AA	1.00	GRS	3PR#16		E-028
S0901BA	JB0901AA	TIT0901B	0.75	GRS	1PR#16		E-028
S0901BB	TIT0901B	TE0901B	0.75	GRS	1TR#16		E-028
S0901CA	JB0901AA	FY0901	0.75	GRS	1PR#16		E-028

CONDUIT	FROM	TO	SIZE	TYPE	CONTAINS	VIA/REMARKS	DWG
S1001AA	TB0901A	JB1001AA	1.00	GRS	3PR#16		E-028
S1001AB	JB1001AA	TIT1001A	0.75	GRS	1PR#16		E-028
S1001AC	TIT1001A	TE1001A	0.75	GRS	1TR#16		E-028
S1001BA	JB1001AA	TIT1001B	0.75	GRS	1PR#16		E-028
S1001BB	TIT1001B	TE1001B	0.75	GRS	1TR#16		E-028
S1001CA	JB1001AA	FY1001	0.75	GRS	1PR#16		E-028
S1101AA	TB0901A	JB1101AA	1.00	GRS	3PR#16		E-028
S1101AB	JB1101AA	TIT1101A	0.75	GRS	1PR#16		E-028
S1101AC	TIT1101A	TE1101A	0.75	GRS	1TR#16		E-028
S1101BA	JB1101AA	TIT1101B	0.75	GRS	1PR#16		E-028
S1101BB	TIT1101B	TE1101B	0.75	GRS	1TR#16		E-028
S1101CA	JB1101AA	FY1101	0.75	GRS	1PR#16		E-028
S1201AA	TB0901A	JB1201AA	1.00	GRS	3PR#16		E-028
S1201AB	JB1201AA	TIT1201A	0.75	GRS	1PR#16		E-028
S1201AC	TIT1201A	TE1201A	0.75	GRS	1TR#16		E-028
S1201BA	JB1201AA	TIT1201B	0.75	GRS	1PR#16		E-028
S1201BB	TIT1201B	TE1201B	0.75	GRS	1TR#16		E-028
S1201CA	JB1201AA	FY1201	0.75	GRS	1PR#16		E-028
S0101AC	JB0101AA	FY0101	0.75	GRS	1PR#16		E-028
S0101AD	JB0101AA	TB0201B	1.00	GRS	2PR#16		E-028

BY CONSULTANT
30-JUL-2003 07:35
P:\cad\23011-EBMUD\ANewDGN\2740037.R01

REGISTERED PROFESSIONAL ENGINEER
TRACY MARIE STORMS
No. C35503
Exp. 09-30-03
CIVIL
STATE OF CALIFORNIA

REGISTERED PROFESSIONAL ENGINEER
ROGER P. ANDERSON
No. 11592
Exp. 9-30-04
STATE OF CALIFORNIA

3" ON ORIGINAL DOCUMENT
0 1 2 3

NO.	DATE		BY	REC.
1	05-03	ADDENDUM No. 1	RPA	

BROWN AND CALDWELL

DESIGNED BY	RPA
DESIGN CHECKED BY	RNS
DRAWN BY	KB
SR. PROJ ENGR. R.P.E. NO.	C35503
APPROVED	
PRINCIPAL IN CHARGE, R.P.E. NO.	

EBMUD REVIEW

PROJECT ENGR. R.P.E. NO.

PROJECT MGR. DONALD KIANG R.P.E. NO. C 29341

RECOMMENDED SR. ENGR. OLUJIMI YOLOYE R.P.E. NO. C 44278

EAST BAY MUNICIPAL UTILITY DISTRICT
SPECIAL DISTRICT No. 1
OAKLAND, CALIFORNIA

MWWTP

DIGESTER HEATING SYSTEM IMPROVEMENTS

ELECTRICAL

CONDUIT AND CABLE SCHEDULE 2

FACILITY: MWWTP	DRAWING No. SD274-E-037
SCALE: NO SCALE	
DATE: APRIL 2003	SHEET 37 OF 44

SPECIFICATION NO: SD274

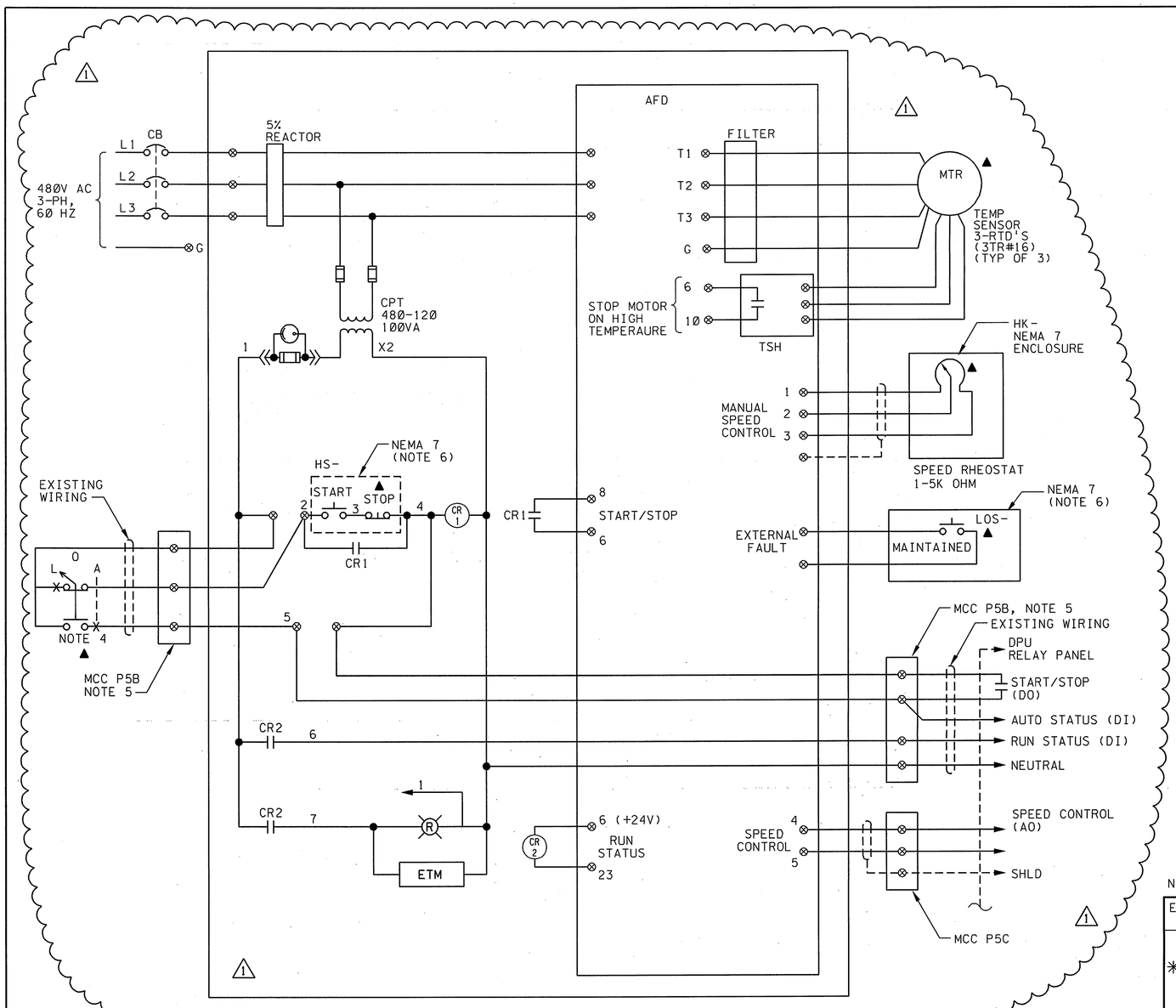

CONTROL DIAGRAM E51A

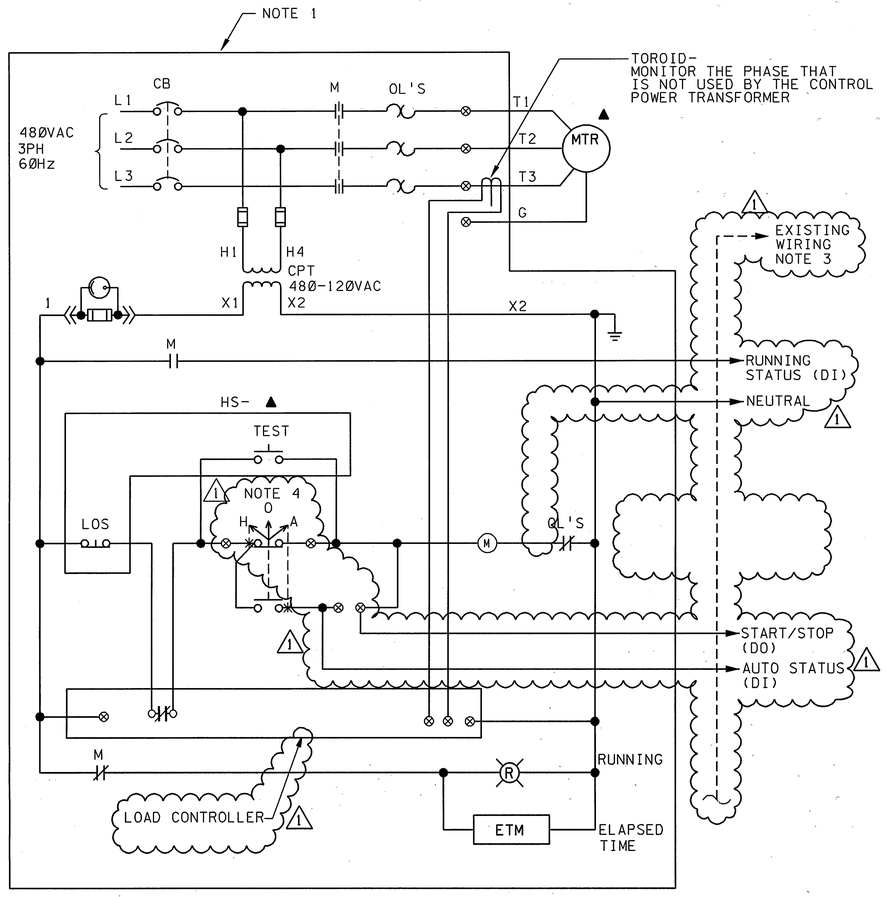

CONTROL DIAGRAM E51B

NOTES:

1. PROVIDE NEW CIRCUIT BREAKER STARTERS IN EXISTING MCC P5B AND MCC P22. SEE DRAWINGS E31 AND E32. MCC P5B IS GE MODEL 7700, CAT NO. 201B7106. MCC P22 IS GE MODEL 7700, CAT NO. 427X155MO3.
2. THE LOAD CONTROLLER WILL SENSE A REDUCED LOAD WHEN THE SLUDGE HEATING RECIRC IS PLUGGED THE HEAT EXCHANGER. TRIP LEVEL SHALL BE DETERMINED IN THE FIELD.
3. RECONNECT EXISTING DCS WIRES TO NEW STARTER.
4. EXISTING SWITCH LOCATED IN THE DIGESTER CONTROL PANEL IN THE DIGESTER CONTROL BUILDING. WIRING IS EXISTING TO MCC P5B.
5. CONSTRUCTION MANAGER SHALL SELECT AN ABANDONED MOTOR STARTER CONTROLS IN MCC P5B FOR THE CONTRACTOR TO USE. CONTRACTOR SHALL PROVIDE TERMINAL BLOCKS IN THE MCC TO EXTEND WIRES TO AFDS.
6. SAME ENCLOSURE AS HS- AND LOS.

NOTE 1

EQUIPMENT NUMBER	DESCRIPTION	HS-	MCC-
P02010	SLUDGE HEATING RECIRC PUMP 2	HS02010	MCC P5B
✳P03010	SLUDGE HEATING RECIRC PUMP 3	-	MCC P5B
P04010	SLUDGE HEATING RECIRC PUMP 4	HS04010	MCC P5B
P06010	SLUDGE HEATING RECIRC PUMP 6	HS06010	MCC P5B
✳P08010	SLUDGE HEATING RECIRC PUMP 8	-	MCC P5B
P09010	SLUDGE HEATING RECIRC PUMP 9	HS09010	MCC P22
P10010	SLUDGE HEATING RECIRC PUMP 10	HS10010	MCC P22
✳P11010	SLUDGE HEATING RECIRC PUMP 11	-	MCC P22
P12010	SLUDGE HEATING RECIRC PUMP 12	HS12010	MCC P22

✳PROVIDE MOTOR STARTER AND TERMINATIONS ONLY. THE FIELD WIRING IS EXISTING.

EQUIPMENT NUMBER	DESCRIPTION	AFD-	HS-	HK-	LOS-
P01050	PRIMARY HOT WATER PUMP No.1	AFD01050	HS01050	HK01050	LOS01050
P01060	PRIMARY HOT WATER PUMP No.2	AFD01060	HS01060	HK01060	LOS01060

LEGEND

▲ LOCATED IN THE FIELD

REGISTERED PROFESSIONAL ENGINEER
TRACY MARIE STEPPERS
No. C35503
Exp. 09-30-03
CIVIL
STATE OF CALIFORNIA

REGISTERED PROFESSIONAL ENGINEER
ROGER P. ANDERSON
No. 11592
Exp. 9-30-04
STATE OF CALIFORNIA

3" ON ORIGINAL DOCUMENT
0 1 2 3

NO.	DATE		BY	REC.
1	5/03	ADDENDUM No. 1	RPA	

BROWN AND CALDWELL

DESIGNED BY RPA
DESIGN CHECKED BY RNS
DRAWN BY KB
SR. PROJ ENGR. R.P.E. NO. C35503
APPROVED
PRINCIPAL IN CHARGE, R.P.E. NO.

EBMUD REVIEW
PROJECT ENGR. R.P.E. NO.
PROJECT MGR. DONALD KIANG R.P.E. NO. C 29341
RECOMMENDED SR. ENGR. OLUJIMI YOLOYE R.P.E. NO. C 44278

EAST BAY MUNICIPAL UTILITY DISTRICT
SPECIAL DISTRICT No. 1
OAKLAND, CALIFORNIA

MWWTP

DIGESTER HEATING SYSTEM IMPROVEMENTS

ELECTRICAL

CONTROL DIAGRAMS 1

FACILITY: MWWTP
SCALE: NO SCALE
DATE: APRIL 2003
DRAWING No. SD274-E-051
SHEET 38 OF 44

SPECIFICATION NO: SD274

BY CONSULTANT
29-JUL-2003 18:01
P:\SOds\23011-EBMUD\ANewDGN\S274e051.R01

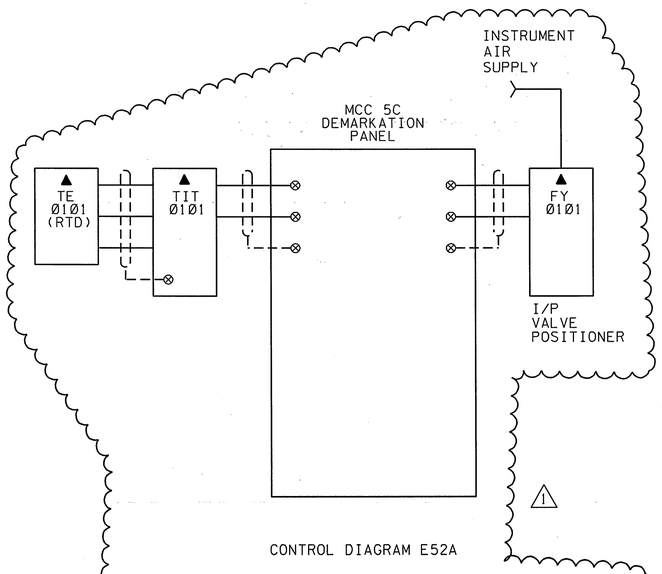

CONTROL DIAGRAM E52A

LOOP	DESCRIPTION
TØ1Ø1	BOILER HEAT LOOP TEMPERATURE CONTROL

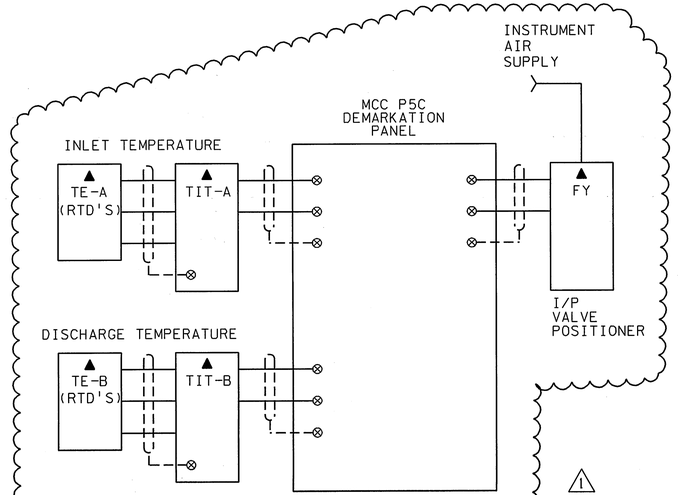

CONTROL DIAGRAM E52B

LOOP	DESCRIPTION	TE-A	TIT-A	TE-B	TIT-B	FY
Ø2Ø1	HEAT LOOP 2 TEMPERATURE CONTROL	TEØ2Ø1A	TITØ2Ø1A	TEØ2Ø1B	TITØ2Ø1B	FYØ2Ø1
Ø3Ø1	HEAT LOOP 3 TEMPERATURE CONTROL	TEØ3Ø1A	TITØ3Ø1A	TEØ3Ø1B	TITØ3Ø1B	FYØ3Ø1
Ø4Ø1	HEAT LOOP 4 TEMPERATURE CONTROL	TEØ4Ø1A	TITØ4Ø1A	TEØ4Ø1B	TITØ4Ø1B	FYØ4Ø1
Ø6Ø1	HEAT LOOP 6 TEMPERATURE CONTROL	TEØ6Ø1A	TITØ6Ø1A	TEØ6Ø1B	TITØ6Ø1B	FYØ6Ø1
Ø8Ø1	HEAT LOOP 8 TEMPERATURE CONTROL	TEØ8Ø1A	TITØ8Ø1A	TEØ8Ø1B	TITØ8Ø1B	FYØ8Ø1
Ø9Ø1	HEAT LOOP 9 TEMPERATURE CONTROL	TEØ9Ø1A	TITØ9Ø1A	TEØ9Ø1B	TITØ9Ø1B	FYØ9Ø1
1Ø1	HEAT LOOP 10 TEMPERATURE CONTROL	TE1Ø1A	TIT1Ø1A	TE1Ø1B	TIT1Ø1B	FY1Ø1
11Ø1	HEAT LOOP 11 TEMPERATURE CONTROL	TE11Ø1A	TIT11Ø1A	TE11Ø1B	TIT11Ø1B	FY11Ø1
1201	HEAT LOOP 12 TEMPERATURE CONTROL	TE1201A	TIT1201A	TE1201B	TIT1201B	FY1201

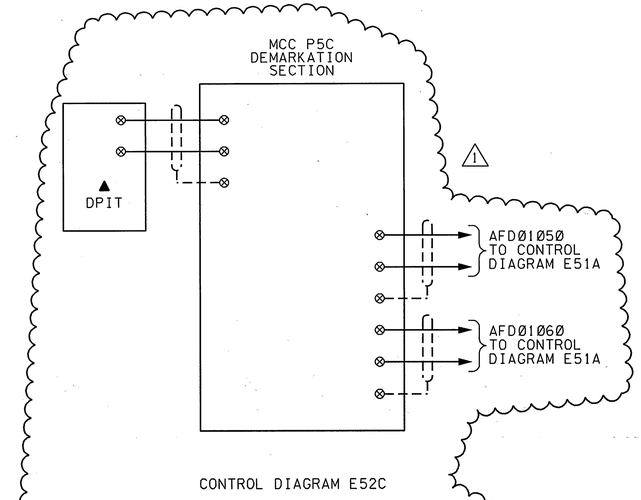

CONTROL DIAGRAM E52C

LOOP	DESCRIPTION
DPITØ1Ø2	HHRS DIFFERENTIAL PRESSURE CONTROL

LEGEND

▲ LOCATED IN THE FIELD

REGISTERED PROFESSIONAL ENGINEER TRACY MARIE STEPERS No. C35503 Exp. 09-30-03 CIVIL STATE OF CALIFORNIA

REGISTERED PROFESSIONAL ENGINEER ROGER P. ANDERSON No. 11592 Exp. 9-30-04 STATE OF CALIFORNIA

3" ON ORIGINAL DOCUMENT
0 1 2 3

NO.	DATE		BY	REC.
1	5/Ø3	ADDENDUM No. 1	RPA	

BROWN AND CALDWELL

DESIGNED BY	RPA
DESIGN CHECKED BY	RNS
DRAWN BY	KB
SR. PROJ ENGR. R.P.E. NO.	C35503
APPROVED	
PRINCIPAL IN CHARGE, R.P.E. NO.	

EBMUD REVIEW

PROJECT ENGR. R.P.E. NO.

PROJECT MGR. DONALD KIANG R.P.E. NO. C 29341

RECOMMENDED SR. ENGR. OLUJIMI YOLOYE R.P.E. NO. C 44278

EAST BAY MUNICIPAL UTILITY DISTRICT
SPECIAL DISTRICT No. 1
OAKLAND, CALIFORNIA

MWWTP
DIGESTER HEATING SYSTEM IMPROVEMENTS
ELECTRICAL
CONTROL DIAGRAMS 2

FACILITY: MWWTP	DRAWING No. SD274-E-052
SCALE: NO SCALE	SHEET 39 OF 44
DATE: APRIL 2003	

SPECIFICATION NO: SD274

BY CONSULTANT
29-JUL-2003 18:02
P:\cad\e2311-EBMUD\ANewDGN\e274e052.R01

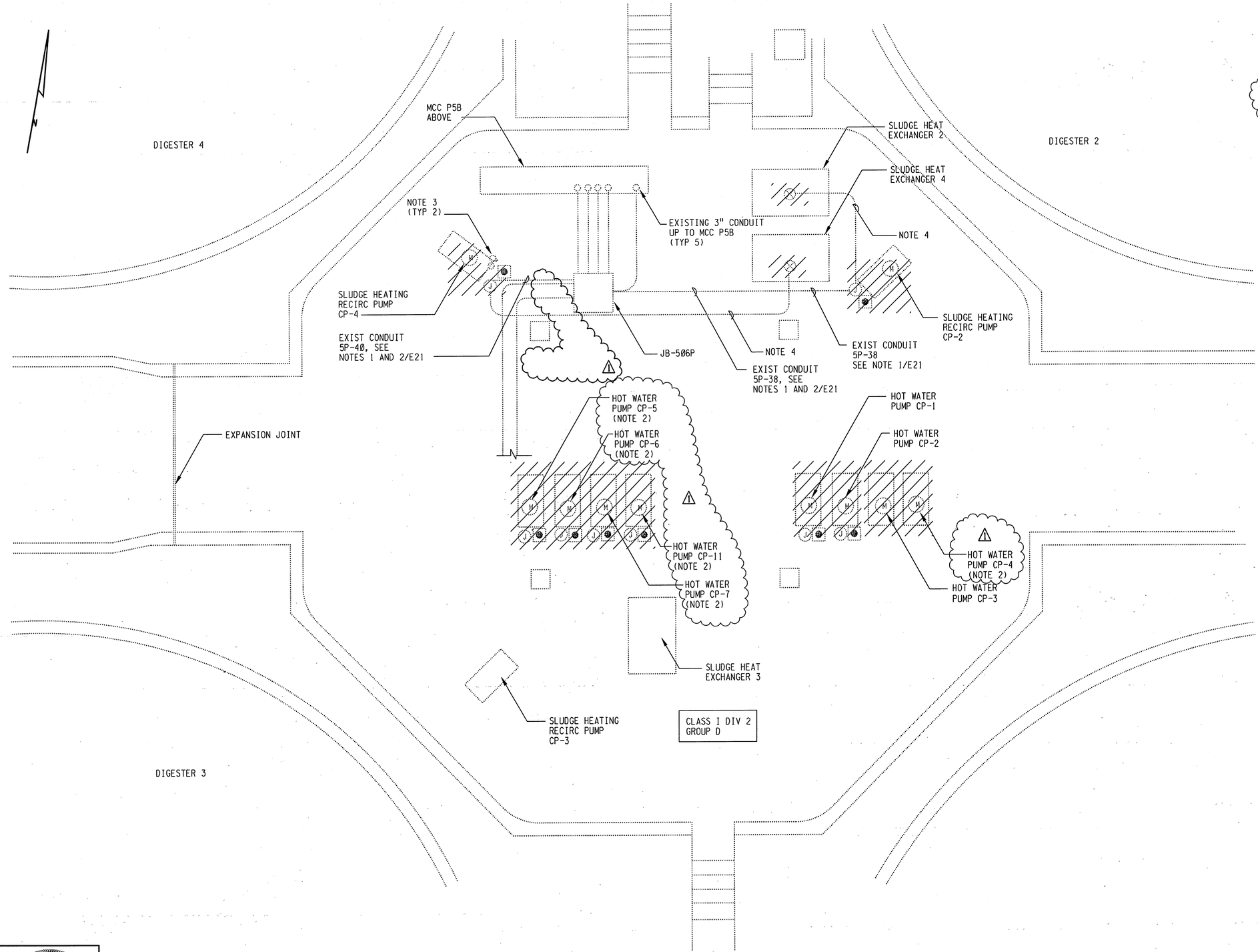

NOTES:

1. SEE SITE LAYOUT DRAWING M100. EXISTING BASEMENT OF DIGESTER CONTROL BUILDING IS VERY CONGESTED. NOT ALL EXISTING EQUIPMENT IS SHOWN. LOCATIONS OF EQUIPMENT SHOWN IS APPROXIMATE.
2. ⚠1 REMOVE 5 1-1/4" CABLE/CONDUITS FROM JB506P TO HOT WATER PUMPS CP-4,CP-5, CP-6, CP-7 AND CP-11. DO NOT REMOVE CONDUIT RACK. SEE NOTE 1/E21.
3. 2-3" CONDUITS UP TO DPU-12.
4. DEMOLISH CONDUIT AT FIRST HORIZONTAL COUPLING AND CAP.

REGISTERED PROFESSIONAL ENGINEER TRACY MARIE STIDERS No. C35503 Exp. 09-30-03 CIVIL STATE OF CALIFORNIA

REGISTERED PROFESSIONAL ENGINEER ROGER P. ANDERSON No. 11592 Exp. 9-30-04 STATE OF CALIFORNIA

3" ON ORIGINAL DOCUMENT
0 1 2 3

NO.	DATE		BY	REC.
⚠	5/03	ADDENDUM No.1	RPA	

BROWN AND CALDWELL

DESIGNED BY	RPA
DESIGN CHECKED BY	RNS
DRAWN BY	KB
SR. PROJ ENGR. R.P.E. NO.	C35503
APPROVED	
PRINCIPAL IN CHARGE, R.P.E. NO.	

EBMUD REVIEW
PROJECT ENGR. R.P.E. NO.
PROJECT MGR. DONALD KIANG R.P.E. NO. C 29341
RECOMMENDED SR. ENGR. OLUJIMI YOLOYE R.P.E. NO. C 44278

EAST BAY MUNICIPAL UTILITY DISTRICT
SPECIAL DISTRICT No. 1
OAKLAND, CALIFORNIA

MWWTP
DIGESTER HEATING SYSTEM IMPROVEMENTS
ELECTRICAL

BASEMENT LEVEL DEMOLITION PLAN

FACILITY: MWWTP	DRAWING No. SD274-E-100
SCALE: 1/4" = 1'-0"	
DATE: APRIL 2003	SHEET 40 OF 44

SPECIFICATION NO: SD274

BY CONSULTANT
29-JUL-2003 18:03
P:\cad\23011-EBMUD\ANewDGN\2274e100.R01

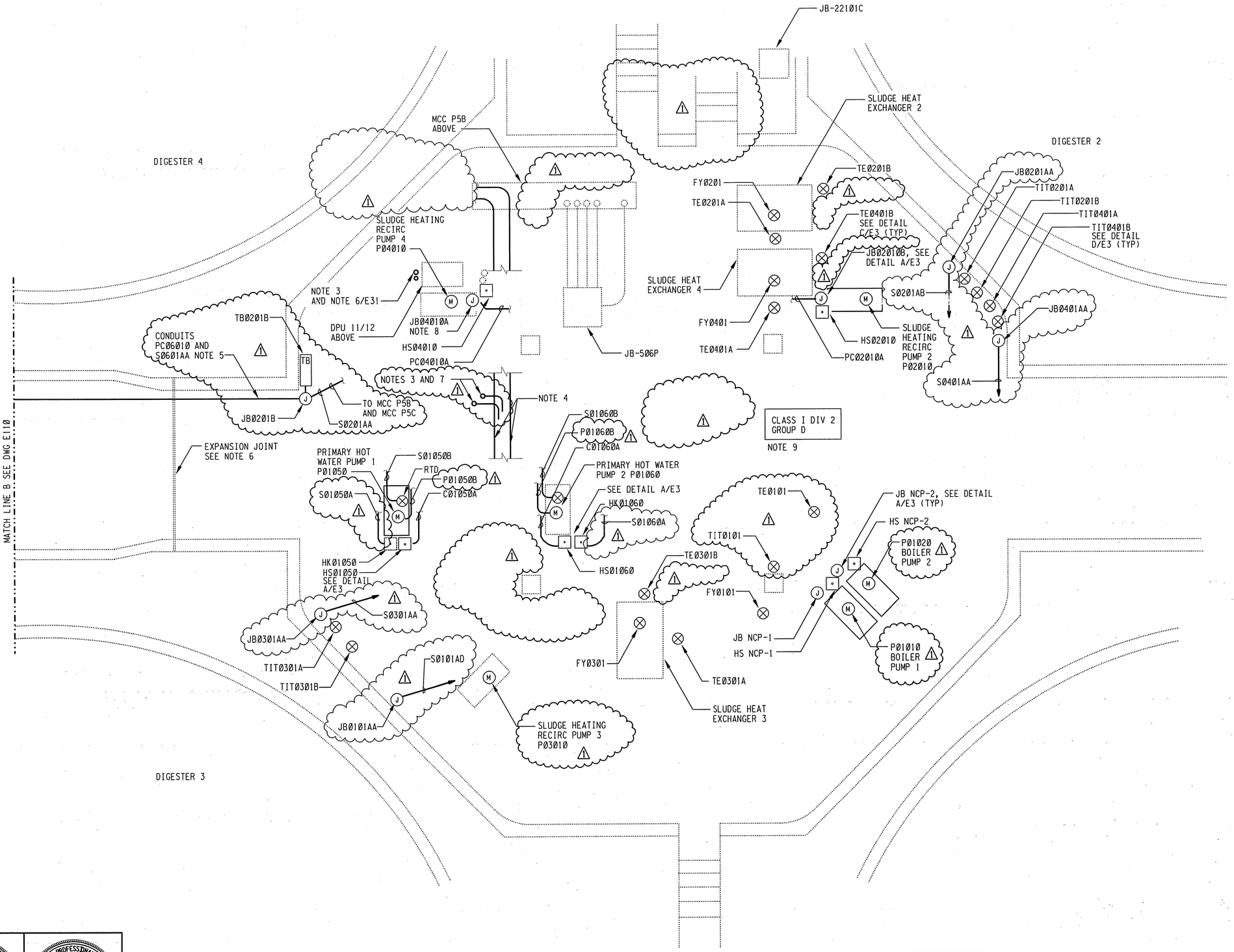

NOTES:

1. CONTRACTOR IS ADVISED THAT CEILING AND WALL CAVITIES ARE EXTREMELY CONGESTED WITH PIPES. SEE DRAWINGS M101 AND M104. NOT ALL EQUIPMENT IS SHOWN AND LOCATION OF SHOWN EQUIPMENT IS APPROXIMATE.
2. NOT ALL CONDUITS ARE SHOWN, SEE SINGLE LINE DIAGRAMS AND RACEWAY AND CABLE SCHEDULE DRAWINGS FOR RACEWAY AND CABLE REQUIREMENTS.
3. BEFORE CORE DRILLING CEILING THRU FLOOR ABOVE VERIFY EXACT LOCATION OF EQUIPMENT ABOVE. DO NOT DAMAGE REINFORCING STEEL.
4. ROUTE NEW CONDUITS ON EXISTING CONDUIT RACK.
5. ROUTE CONDUITS DOWN THE GALLERY ON EXISTING RACK ALONG THE WALL.
6. INSTALL EXPANSION FITTINGS IN ALL CONDUIT RUNS CROSSING EXPANSION JOINTS.
7. CORE BORE FOR 2 2-1/2" , 2 1-1/4" AND 4 3/4" CONDUITS TO AFD'S ABOVE. PROVIDE LB CONDULETS. SEE NOTE 3
8. MOUNT JUNCTION BOX AND CONTROL STATION ON EXISTING STAND.
9. SEE DETAIL B/E3 FOR CONDUIT INSTALLATION.
10. SEE NOTES 7 AND 8 ON DWG E120.

BY CONSULTANT
29-JUL-2003 18:04
P:\cad\23011-EBMUD\aNewDGN\274e101.R01

REGISTERED PROFESSIONAL ENGINEER TRACY MARIE STIVERS No. C35503 Exp. 09-30-03 CIVIL STATE OF CALIFORNIA

REGISTERED PROFESSIONAL ENGINEER ROGER P. ANDERSON No. 11592 Exp. 9-30-04 STATE OF CALIFORNIA

3" ON ORIGINAL DOCUMENT
0 1 2 3

NO.	DATE		BY	REC.
1	5/03	ADDENDUM No. 1	RPA	

BROWN AND CALDWELL

DESIGNED BY	RPA
DESIGN CHECKED BY	RNS
DRAWN BY	KB
SR. PROJ ENGR. R.P.E. NO.	C35503
APPROVED	
PRINCIPAL IN CHARGE, R.P.E. NO.	

EBMUD REVIEW
PROJECT ENGR. R.P.E. NO.
PROJECT MGR. DONALD KIANG R.P.E. NO. C 29341
RECOMMENDED SR. ENGR. OLUJIMI YOLOYE R.P.E. NO. C 44278

EAST BAY MUNICIPAL UTILITY DISTRICT
SPECIAL DISTRICT No. 1
OAKLAND, CALIFORNIA

MWWTP
DIGESTER HEATING SYSTEM IMPROVEMENTS
ELECTRICAL
DIGESTER CONTROL BUILDING
BASEMENT LEVEL MODIFICATION PLAN

FACILITY: MWWTP	DRAWING No. SD274-E-101
SCALE: 1/4" = 1'-0"	
DATE: APRIL 2003	SHEET 41 OF 44

SPECIFICATION NO: SD274

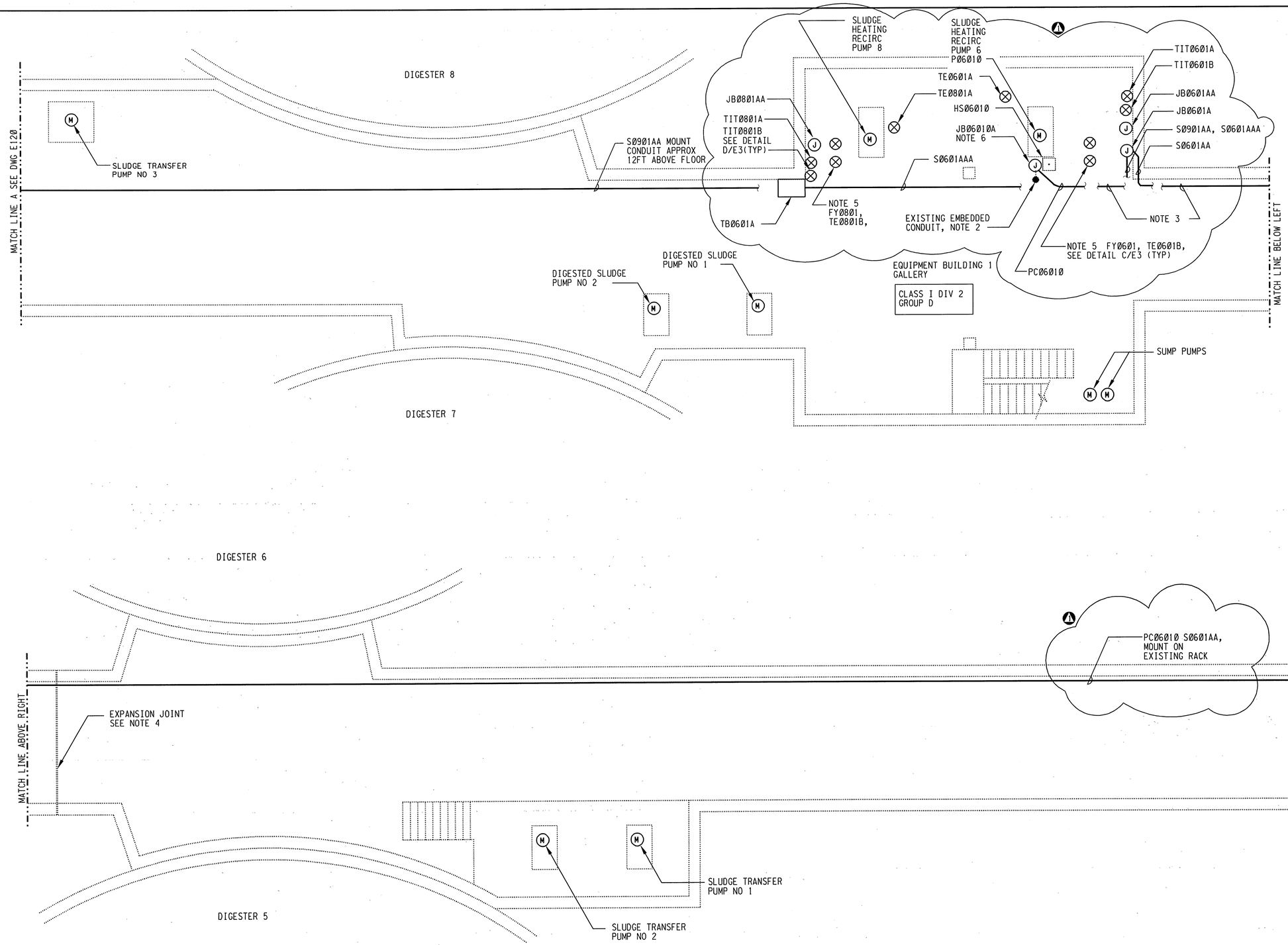

NOTES:

1. SEE SITE LAYOUT DRAWING M100. CONTRACTOR IS ADVISED THAT CEILING AND WALL CAVITIES ARE EXTREMELY CONGESTED. SEE DRAWING M111. NOT ALL EQUIPMENT IS SHOWN AND LOCATION OF SHOWN EXISTING EQUIPMENT IS APPROXIMATE. CONTRACTOR SHALL FIELD VERIFY ANY OBSTRUCTIONS IN THE ROUTING OF NEW CONDUITS. SEE SINGLE LINE DIAGRAM AND RACEWAY AND CABLE SCHEDULE FOR CABLE AND CONDUIT REQUIREMENTS.
2. EXISTING CONDUIT FEEDING PUMP IS EMBEDDED, CUT CONDUIT 6" ABOVE GRADE AND CAP. PROVIDE NEW CONDUIT AS SHOWN.
3. ROUTE CONDUITS ON EXISTING RACK ALONG THE WALL, CHANGE TO A HIGHER ELEVATION AS CONDUITS ENTER EQUIPMENT BUILDING 1.
4. INSTALL EXPANSION JOINTS IN ALL CONDUIT RUNS CROSSING EXPANSION JOINTS.
5. SLUDGE HEAT EXCHANGERS 6 AND 8 ARE LOCATED ABOVE AT GRADE. LOCATION OF INSTRUMENTS IN GALLERY IS APPROXIMATE.
6. MOUNT JUNCTION BOX AND CONTROL STATION ON EXISTING STAND.
7. SEE NOTES 7 AND 8 ON DWG SD274-E-120

REGISTERED PROFESSIONAL ENGINEER TRACY MARIE STEERS No. C35503 Exp. 09-30-03 CIVIL STATE OF CALIFORNIA

REGISTERED PROFESSIONAL ENGINEER ROGER P. ANDERSON No. 11592 Exp. 9-30-04 STATE OF CALIFORNIA

3" ON ORIGINAL DOCUMENT
0 1 2 3

NO.	DATE		BY	REC.
05-03		ADDENDUM No. 1	RPA	

BROWN AND CALDWELL

DESIGNED BY	RPA
DESIGN CHECKED BY	RNS
DRAWN BY	KB
SR. PROJ ENGR. R.P.E. NO.	C35503
APPROVED	
PRINCIPAL IN CHARGE, R.P.E. NO.	

EBMUD REVIEW
PROJECT ENGR. R.P.E. NO.
PROJECT MGR. DONALD KIANG R.P.E. NO. C 29341
RECOMMENDED SR. ENGR. OLUJIMI YOLOYE R.P.E. NO. C 44278

EAST BAY MUNICIPAL UTILITY DISTRICT
SPECIAL DISTRICT No. 1
OAKLAND, CALIFORNIA

MWWTP
DIGESTER HEATING SYSTEM IMPROVEMENTS
ELECTRICAL
GALLERY MODIFICATION PLAN 1

FACILITY: MWWTP	DRAWING No. SD274-E-110
SCALE: 3/16" = 1'-0"	
DATE: APRIL 2003	SHEET 42 OF 44

SPECIFICATION NO: SD274

BY CONSULTANT
29-JUL-2003 18:05
P:\ccd\c23011-EBMUD\ANewDGN\s274e110.R01

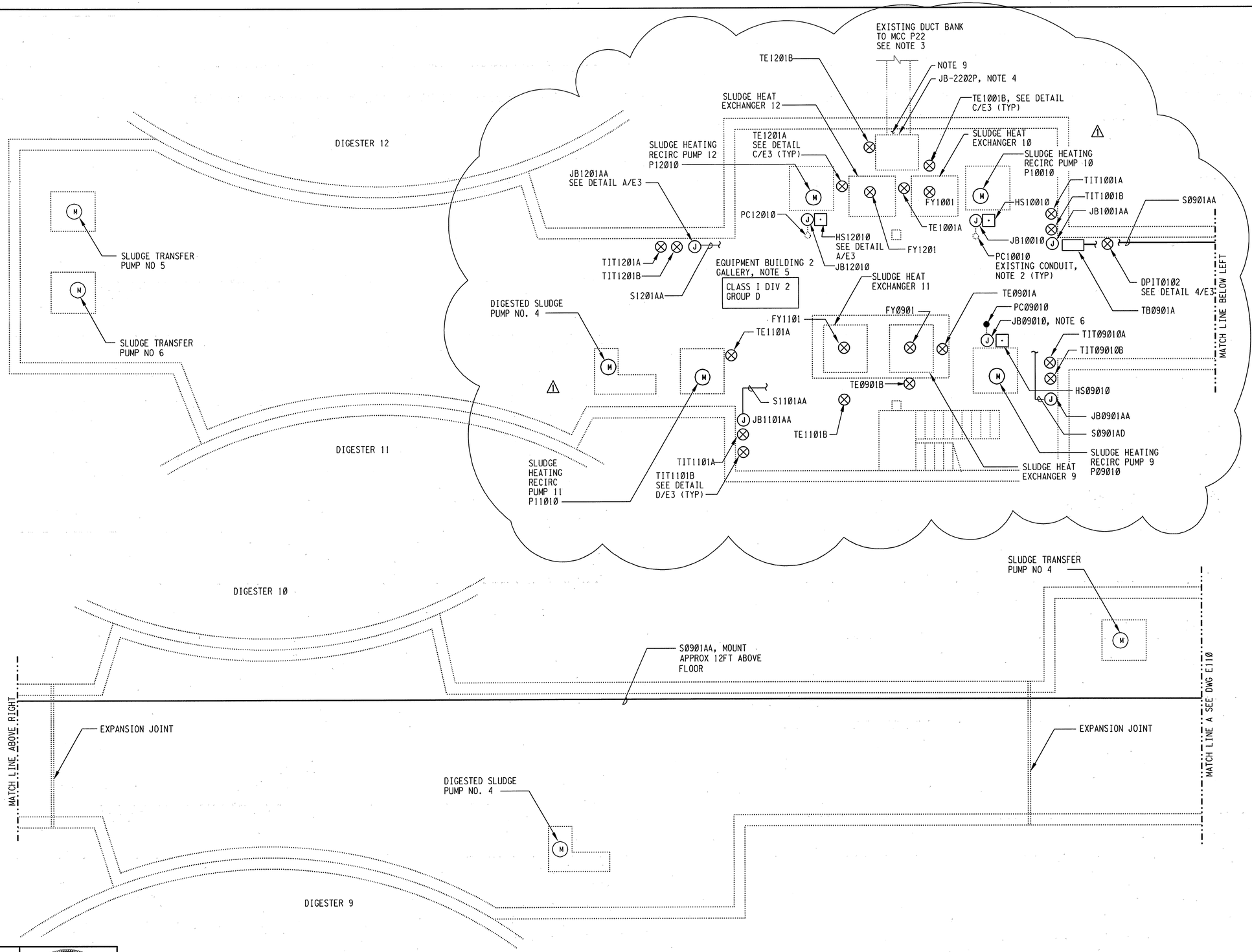

NOTES:

1. SEE DRAWING M100. CONTRACTOR IS ADVISED THAT CEILING AND WALL CAVITIES ARE EXTREMELY CONGESTED. SEE DRAWINGS M120, M121 AND M122. NOT ALL EQUIPMENT ARE SHOWN AND LOCATION OF SHOWN EQUIPMENT IS APPROXIMATE. CONTRACTOR SHALL FIELD VERIFY ANY OBSTRUCTIONS IN THE ROUTING OF NEW CONDUITS. SEE SINGLE LINE DIAGRAM AND CONDUIT SCHEDULE DRAWINGS FOR CABLE AND CONDUIT REQUIREMENTS.
2. EXISTING CONDUIT RUNS UP TO THE CEILING AND INTO JB-2202P.
3. DUCT BANK CONTINUES TO MH-L19A DWG E32, SEE SITE LAYOUT DWG M100. SEE ALSO NOTE 3/E32.
4. EXISTING JUNCTION BOX JB-2202P.
5. SEE DETAIL B/E3 FOR CONDUIT INSTALLATION.
6. REUSE EXISTING STAND.
7. THE LOCATION OF THE INSTRUMENTS ARE APPROXIMATE. COORDINATE THE ACTUAL LOCATION WITH THE P&ID'S AND MECHANICAL PIPING.
8. INSTRUMENT TRANSMITTERS (TIT) SHALL BE MOUNTED ON THE WALL PER DETAIL D/E3.
9. CONDUIT SEALS ARE EXISTING FOR THE SPARE CONDUITS GOING TO MCC P22. ACCESS TO THESE SEALS IS LIMITED. USE THE NEW EXPANSIVE SEALING COMPOUND BY CROUSE-HINDS.

REGISTERED PROFESSIONAL ENGINEER
TRACY MARIE STICKERS
No. C35503
Exp. 09-30-03
CIVIL
STATE OF CALIFORNIA

REGISTERED PROFESSIONAL ENGINEER
ROGER P. ANDERSON
No. 11592
Exp. 9-30-04
STATE OF CALIFORNIA

3" ON ORIGINAL DOCUMENT
0 1 2 3

NO.	DATE		BY	REC.
1	05-03	ADDENDUM No. 1	RPA	

BROWN AND CALDWELL

DESIGNED BY	RPA
DESIGN CHECKED BY	RNS
DRAWN BY	KB
SR. PROJ ENGR. R.P.E. NO.	C35503
APPROVED	
PRINCIPAL IN CHARGE, R.P.E. NO.	

EBMUD REVIEW

PROJECT ENGR. R.P.E. NO.

PROJECT MGR. DONALD KIANG R.P.E. NO. C 29341

RECOMMENDED SR. ENGR. OLUJIMI YOLOYE R.P.E. NO. C 44278

EAST BAY MUNICIPAL UTILITY DISTRICT
SPECIAL DISTRICT No. 1
OAKLAND, CALIFORNIA

MWWTP
DIGESTER HEATING SYSTEM IMPROVEMENTS
ELECTRICAL

GALLERY MODIFICATION PLAN 2

FACILITY: MWWTP	DRAWING No. SD274-E-120
SCALE: 3/16" = 1'-0"	
DATE: APRIL 2003	SHEET 43 OF 44

SPECIFICATION NO: SD274

BY CONSULTANT
29-JUL-2003 18:06
P:\scad\23011-EBMUD\ANewDGN\2274e120.R01

DRAWING INDEX

PROJECT DRAWINGS (i.e. GENERAL, CIVIL, etc.)

NUMBER	DRAWING NUMBER	DRAWING TITLE
1		COVER SHEET
2	SD274-G-001	VICINITY MAP, LOCATION MAP, AND INDEX OF DRAWINGS
		PROCESS AND INSTRUMENTATION DIAGRAMS
3	SD274-P-100	PROCESS SYMBOLS
4	SD274-P-101	EXISTING HOT WATER SYSTEM SCHEMATIC
5	SD274-P-102	DIGESTER HOT WATER SYSTEM SCHEMATIC 1
6	SD274-P-103	DIGESTER HOT WATER SYSTEM SCHEMATIC 2
7	SD274-P-104	DIGESTER HOT WATER SYSTEM SCHEMATIC 3
		MECHANICAL
8	SD274-M-001	MISCELLANEOUS DETAILS
9	SD274-M-100	EXISTING SITE LAYOUT, AREA KEY PLAN
		DIGESTER CONTROL BUILDING (DIGESTERS 1-4)
10	SD274-M-101	BASEMENT LEVEL DEMOLITION PLAN
11	SD274-M-102	BASEMENT LEVEL DEMOLITION SECTIONS
12	SD274-M-103	BASEMENT LEVEL DEMOLITION PHOTO DETAILS
13	SD274-M-104	BASEMENT LEVEL MODIFICATION PLAN
14	SD274-M-105	BASEMENT LEVEL MODIFICATION SECTIONS 1
15	SD274-M-106	BASEMENT LEVEL MODIFICATION SECTIONS 2
15A	SD274-M-107	BOILER ROOM DEMOLITION PLAN
		EQUIPMENT BUILDING 1 (DIGESTERS 5-8)
16	SD274-M-120	16 SD274-M-120 BASEMENT LEVEL DEMOLITION PLAN AND SECTIONS
17	SD274-M-121	17 SD274-M-121 BASEMENT LEVEL MODIFICATION PLANS
18	SD274-M-122	18 SD274-M-122 BASEMENT LEVEL AND GROUND FLOOR MODIFICATION SECTIONS
		EQUIPMENT BUILDING 2 (DIGESTERS 9-12)
19	SD274-M-130	BASEMENT LEVEL DEMOLITION PLAN AND SECTIONS
20	SD274-M-131	BASEMENT LEVEL DEMOLITION SECTIONS
21	SD274-M-132	BASEMENT LEVEL MODIFICATION PLAN AND SECTIONS
22	SD274-M-133	BASEMENT LEVEL MODIFICATION SECTIONS
		ELECTRICAL
23	SD274-E-001	ELECTRICAL SYMBOLS 1
24	SD274-E-002	ELECTRICAL SYMBOLS 2
25	SD274-E-003	CONSTRUCTION DETAILS
26	SD274-E-020	MCC P5B AND MCC P22 LOADSTUDY
27	SD274-E-021	MCC P5B SINGLE LINE DIAGRAM DEMOLITION
28	SD274-E-022	MCC P5B SINGLE LINE DIAGRAM MODIFICATION
29	SD274-E-025	MCC P22 SINGLE LINE DIAGRAM DEMOLITION
30	SD274-E-026	MCC P22 SINGLE LINE DIAGRAM MODIFICATION
~~31~~	~~SD274-E-027~~	~~MISCELLANEOUS SINGLE LINE DIAGRAM 1~~
32	SD274-E-028	MISCELLANEOUS SINGLE LINE DIAGRAM 2
33	SD274-E-031	MCC P5B PART PLAN AND ELEVATIONS MODIFICATION
34	SD274-E-032	MCC P22 PLAN, SECTIONS AND ELEVATION MODIFICATION
~~35~~	~~SD274-E-035~~	~~CONDUIT CABLE SCHEDULE 1~~
36	SD274-E-036	CONDUIT CABLE SCHEDULE 2
37	SD274-E-037	CONDUIT CABLE SCHEDULE 3
38	SD274-E-051	CONTROL DIAGRAMS 1
39	SD274-E-052	CONTROL DIAGRAMS 2
40	SD274-E-100	DIGESTER CONTROL BUILDING BASEMENT LEVEL DEMOLITION PLAN
41	SD274-E-101	DIGESTER CONTROL BUILDING BASEMENT LEVEL MODIFICATION PLAN
42	SD274-E-110	EQUIPMENT BUILDING 1 BASEMENT LEVEL MODIFICATION PLAN
43	SD274-E-120	EQUIPMENT BUILDING 2 BASEMENT LEVEL MODIFICATION PLAN
44	SD274-I-101	44 SD274-I-101 FUNCTION DIAGRAM

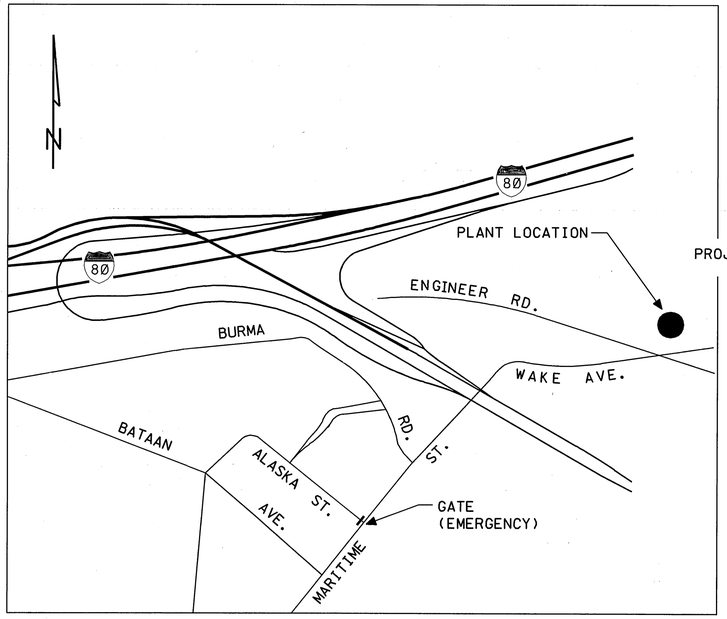

VICINITY MAP

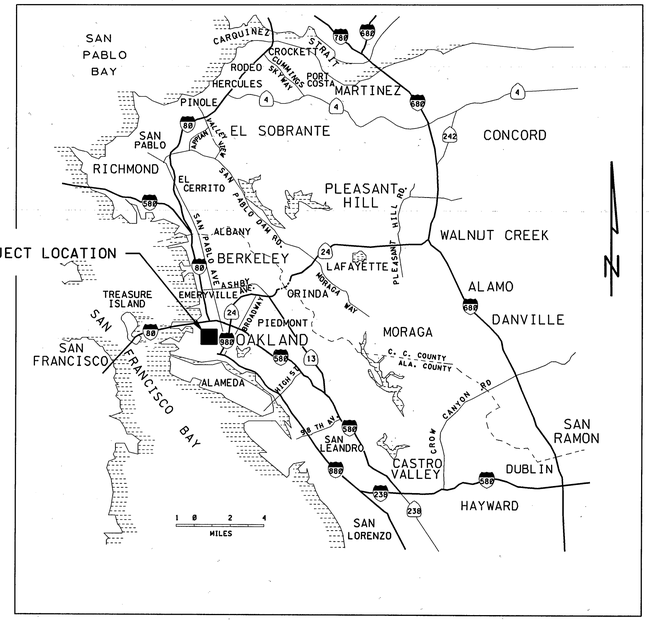

LOCATION MAP

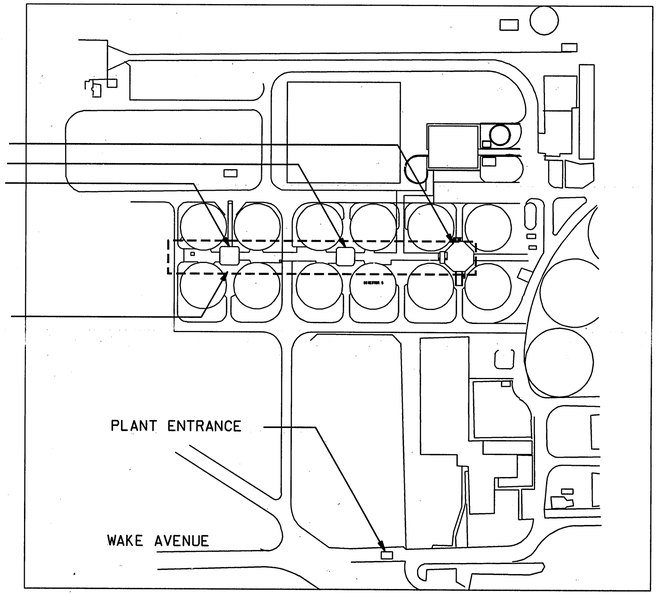

SITE MAP

REGISTERED PROFESSIONAL ENGINEER
TRACY MARIE STUCKEY
No. C35503
Exp. 09-30-03
CIVIL
STATE OF CALIFORNIA

REGISTERED PROFESSIONAL ENGINEER
JAMES L. BARTLETT
No. 23550
Exp. 09-30-05
MECHANICAL
STATE OF CALIFORNIA

3" ON ORIGINAL DOCUMENT
0 1 2 3

NO.	DATE		BY	REC.

BROWN AND CALDWELL

DESIGNED BY JLB
DESIGN CHECKED BY JLB
DRAWN BY HK
SR. PROJ ENGR. R.P.E. NO. C35503
APPROVED TMS
PRINCIPAL IN CHARGE, R.P.E. NO. C35503

EBMUD REVIEW
PROJECT ENGR. R.P.E. NO.
PROJECT MGR. DONALD KIANG R.P.E. NO. C29341
RECOMMENDED SR. ENGR. OLUJIMI YOLOYE R.P.E. NO. C44218

EAST BAY MUNICIPAL UTILITY DISTRICT
SPECIAL DISTRICT No. 1
OAKLAND, CALIFORNIA

MWWTP
DIGESTER HEATING SYSTEM IMPROVEMENT
GENERAL
LOCATION MAP, VICINITY MAP, AND DRAWING LIST

FACILITY: MWWTP
SCALE: NO SCALE
DATE: APRIL 2003
DRAWING No. SD274-G-001
SHEET 2 OF 44

SPECIFICATION NO: SD274

BY CONSULTANT
30-JUL-2003 07:10
P:\cad\c23011-EBMUD\sANewDGN\c274G001.R00

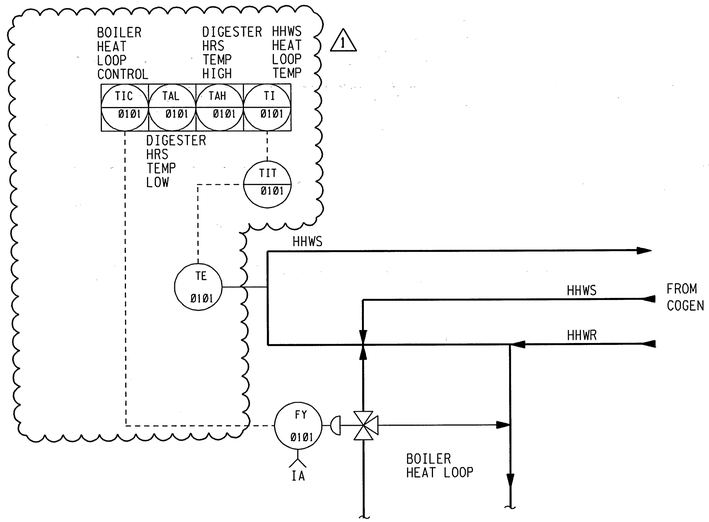

FUNCTION DIAGRAM I1Ø1A
DIGESTER HHWS HEAT LOOP

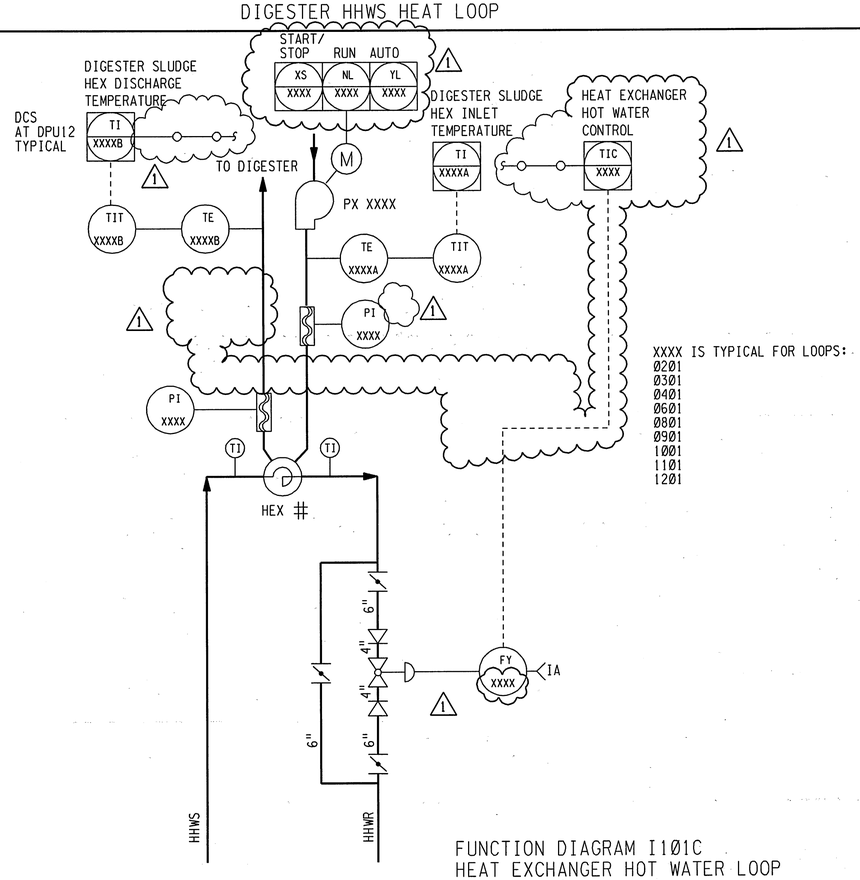

FUNCTION DIAGRAM I1Ø1C
HEAT EXCHANGER HOT WATER LOOP

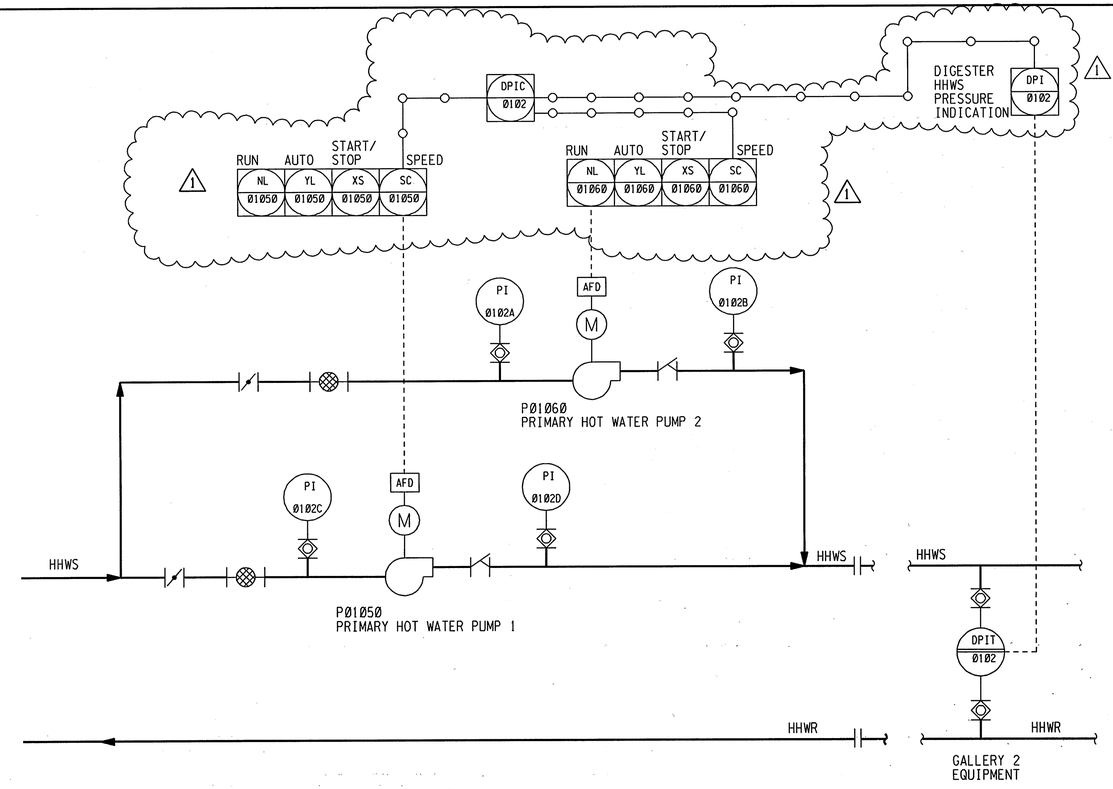

FUNCTION DIAGRAM I1Ø1B
DIGESTER HHWS PRESSURE LOOP

NOTES:

1. SEE DRAWINGS P1 AND P2 FOR SYMBOLS AND LEGENDS.
2. REFERENCE DRAWINGS P1Ø2, P1Ø3 AND P1Ø4 FOR THE DIGESTER SYSTEM HOT WATER SCHEMATICS.

BY CONSULTANT
29-JUL-2003 18:07
P:\cad\2301\EBMUD\ANewDGN\2741101.R01

REGISTERED PROFESSIONAL ENGINEER
TRACY MARIE SYDERS
No. C35503
Exp. 09-30-03
CIVIL
STATE OF CALIFORNIA

REGISTERED PROFESSIONAL ENGINEER
ROGER P. ANDERSON
No. 11592
Exp. 9-30-04
STATE OF CALIFORNIA

3" ON ORIGINAL DOCUMENT
Ø 1 2 3

NO.	DATE		BY	REC.
1	5/Ø3	ADDENDUM No. 1	RPA	

BROWN AND CALDWELL

DESIGNED BY	RPA
DESIGN CHECKED BY	RNS
DRAWN BY	HK
SR. PROJ ENGR. R.P.E. NO.	
APPROVED	
PRINCIPAL IN CHARGE, R.P.E. NO.	

EBMUD REVIEW
PROJECT ENGR. R.P.E. NO.
PROJECT MGR. R.P.E. NO.
RECOMMENDED SR. ENGR. R.P.E. NO.

EAST BAY MUNICIPAL UTILITY DISTRICT
SPECIAL DISTRICT No. 1
OAKLAND, CALIFORNIA

MWWTP
DIGESTER HEATING SYSTEM IMPROVEMENTS
INSTRUMENTATION

FUNCTION DIAGRAMS

FACILITY: MWWTP	DRAWING No. SD274-I-1Ø1
SCALE: NO SCALE	
DATE: APRIL 2003	SHEET 44 OF 44

SPECIFICATION NO: SD274

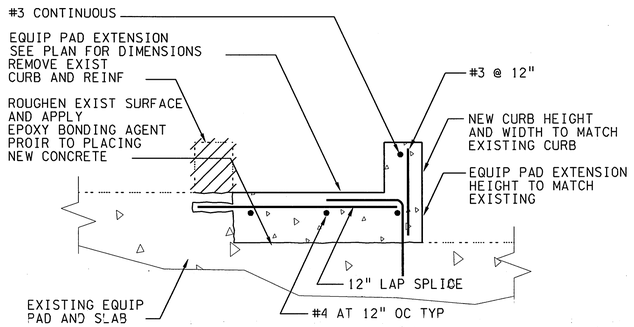

DETAIL 1 / VAR

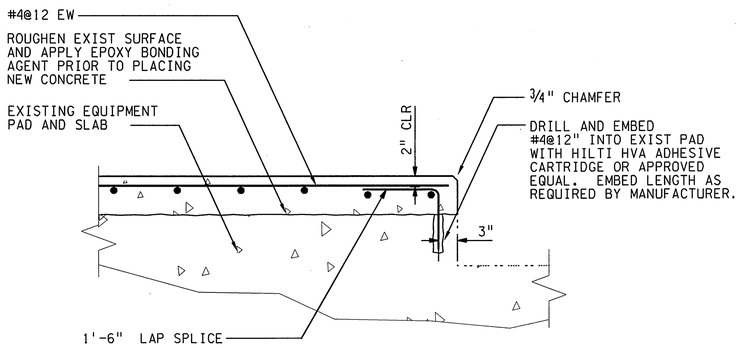

DETAIL 2 / VAR

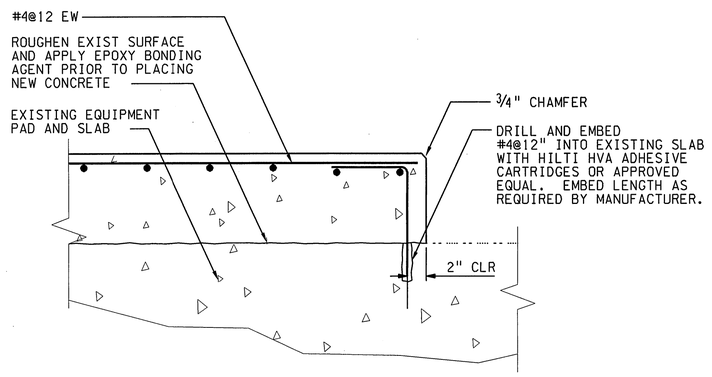

DETAIL 3 / VAR

CONCRETE AND REINFORCING STEEL NOTES

1. CONCRETE CONSTRUCTION SHALL CONFORM TO THE LATEST EDITION OF ACI 301, SPECIFICATIONS FOR STRUCTURAL CONCRETE.
2. CONCRETE 28 DAY STRENGTH (f 'c) = 4000 PSI
3. MAXIMUM WATER/CEMENT RATIO = 0.45 (BY WEIGHT)
4. MAXIMUM SLUMP = 4 INCHES +/- 1 INCH
5. AIR CONTENT = 5 % +/- 1%
6. REINFORCING STEEL SHALL BE ASTM A615, GRADE 60
7. REINFORCING STEEL DETAILING, FABRICATION, AND PLACEMENT SHALL BE IN ACCORDANCE WITH THE LATEST ADDITION OF ACI-315, THE MANUAL OF STANDARD PRACTICE FOR DETAILING REINFORCED CONCRETE STRUCTURES
8. NEW ANCHOR BOLTS SHALL BE HILTI S. S. ADHESIVE ANCHORS WITH 4" MINIMUM EMBEDMENT WITH DIAMETER AS REQUIRED BY EQUIPMENT SUPPORT.

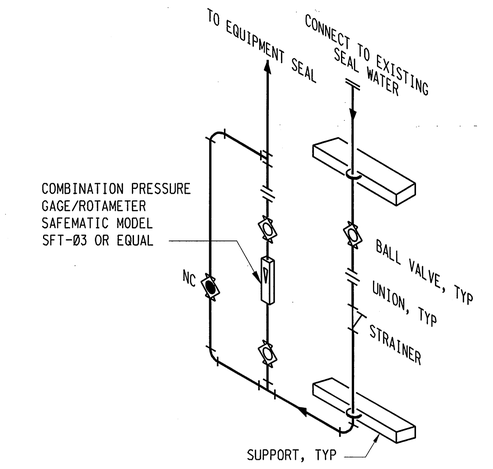

CONTROL UNIT, TYP A

DETAIL 4 / VAR

REGISTERED PROFESSIONAL ENGINEER
TRACY MARIE SYDERS
No. C35503
Exp. 09-30-03
STATE OF CALIFORNIA
CIVIL

3" ON ORIGINAL DOCUMENT
0 1 2 3

NO.	DATE		BY	REC.

BROWN AND CALDWELL

DESIGNED BY	JLB
DESIGN CHECKED BY	JLB
DRAWN BY	HK
SR. PROJ ENGR. R.P.E. NO.	C35503
APPROVED TMS	
PRINCIPAL IN CHARGE, R.P.E. NO. C35503	

EBMUD REVIEW

PROJECT ENGR. R.P.E. NO.

PROJECT MGR. DONALD KIANG R.P.E. NO. C 29341

RECOMMENDED SR. ENGR. OLUJIMI YOLOYE R.P.E. NO. C 44278

EAST BAY MUNICIPAL UTILITY DISTRICT
SPECIAL DISTRICT No. 1
OAKLAND, CALIFORNIA

MWWTP
DIGESTER HEATING SYSTEM IMPROVEMENTS
MECHANICAL

MISCELLANEOUS DETAILS

FACILITY: MWWTP	DRAWING No. SD274-M-001
SCALE: NO SCALE	
DATE: APRIL 2003	SHEET 8 OF 44

SPECIFICATION NO: SD274

BY CONSULTANT
29-JUL-2003 16:56
P:\acad\23011-EBMUD\aNewDGN\274m001.R00

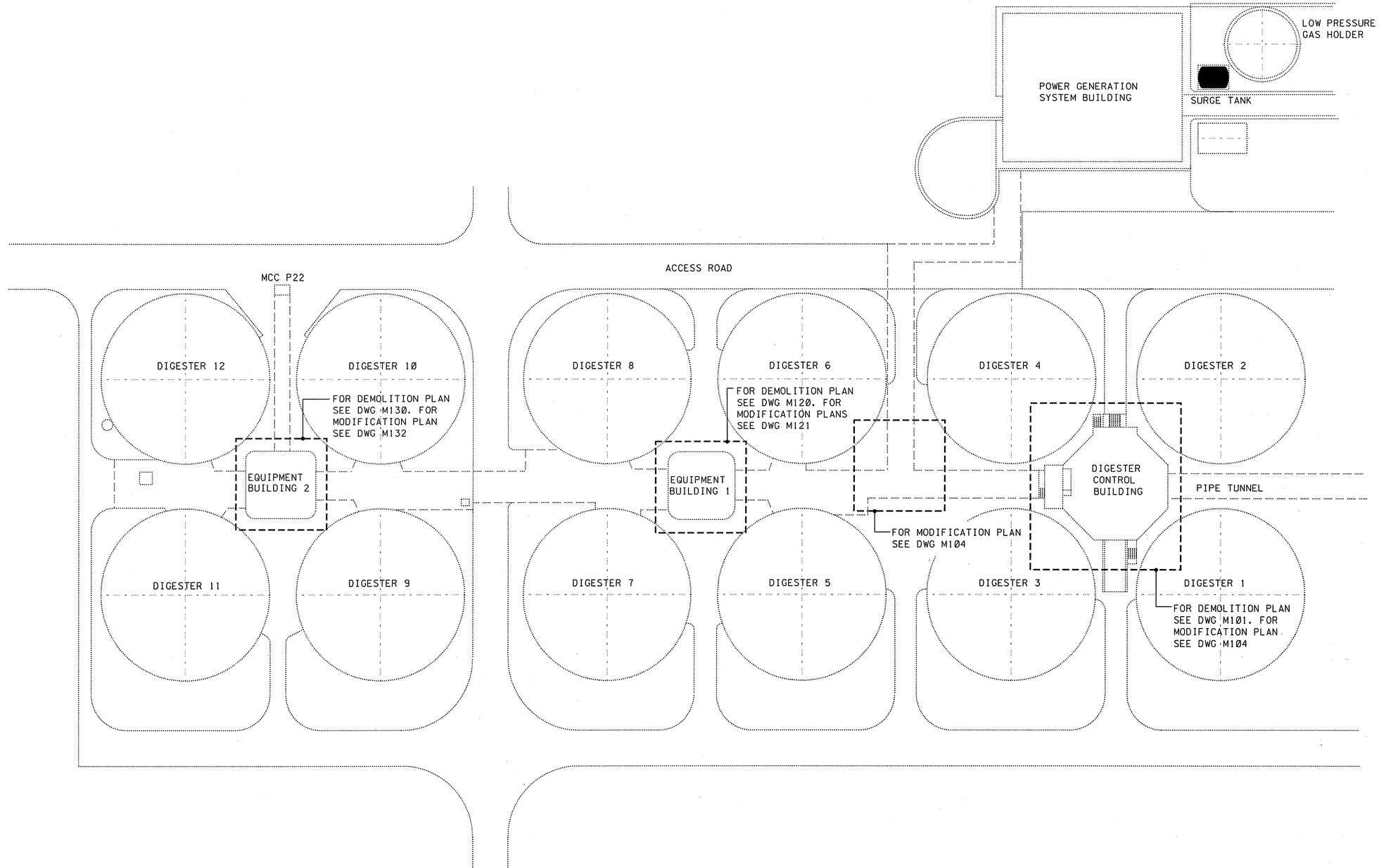

BY CONSULTANT
29-JUL-2003 16:57
P:\ccad\c23011-EBMUD\aNewDGN\s274M100.R00

REGISTERED PROFESSIONAL ENGINEER
TRACY MARIE SYMEARS
No. C35503
Exp. 09-30-03
CIVIL
STATE OF CALIFORNIA

REGISTERED PROFESSIONAL ENGINEER
JAMES L. BARTLETT
No. 23550
Exp. 09-30-05
MECHANICAL
STATE OF CALIFORNIA

3" ON ORIGINAL DOCUMENT
Ø 1 2 3

NO.	DATE		BY	REC.

BROWN AND CALDWELL

DESIGNED BY MBC
DESIGN CHECKED BY JLB
DRAWN BY HK
SR. PROJ ENGR. R.P.E. NO. C35503
APPROVED
PRINCIPAL IN CHARGE, R.P.E. NO. C35503

EBMUD REVIEW
PROJECT ENGR. R.P.E. NO.
PROJECT MGR. DONALD KIANG R.P.E. NO. C29341
RECOMMENDED SR. ENGR. OLUJIMI YOLOYE R.P.E. NO. C44218

EAST BAY MUNICIPAL UTILITY DISTRICT
SPECIAL DISTRICT No. 1
OAKLAND, CALIFORNIA

MWWTP
DIGESTER HEATING SYSTEM IMPROVEMENTS
MECHANICAL
EXISTING SITE LAYOUT
AREA KEY PLAN

FACILITY: MWWTP
SCALE: 1" = 30'-0
DATE: APRIL 2003
DRAWING No. SD274-M-100
SHEET 9 OF 44

SPECIFICATION NO: SD274

NOTES

1. REMOVE EXISTING PUMPS, (CP-1, CP-2, CP-3, CP-4), PADS, PIPING AND APPURTENANCES.
2. REMOVE EXISTING PUMPS, (CP-5, CP-6, CP-7, CP-11), PADS, PIPING AND APPURTENANCES.
3. EXISTING PIPING IS SHOWN BASED ON ORIGINAL DIGESTER CONSTRUCTION DOCUMENTS. THE GENERAL PIPING ARRANGEMENT HAS BEEN CONFIRMED IN FIELD. THE CONTRACTOR SHALL EXPECT THE ACTUAL PIPING LAYOUT DIMENSIONS TO VARY FROM THAT SHOWN ON THIS AND OTHER MECHANICAL DRAWINGS.
4. IA PIPING EXISTING BETWEEN HOT WATER CONTROL VALVES AND MAIN LINES SHALL BE DEMOLISHED AND REPLACED.
5. REMOVE EXISTING PIPING TO THE LIMITS OF THE NEW PIPING SHOWN ON THE MODIFICATION PLANS AND SECTIONS.

LEGEND:

1 — DIRECTION OF PHOTO TAKEN- SEE DWG M-103 FOR PHOTO DETAILS

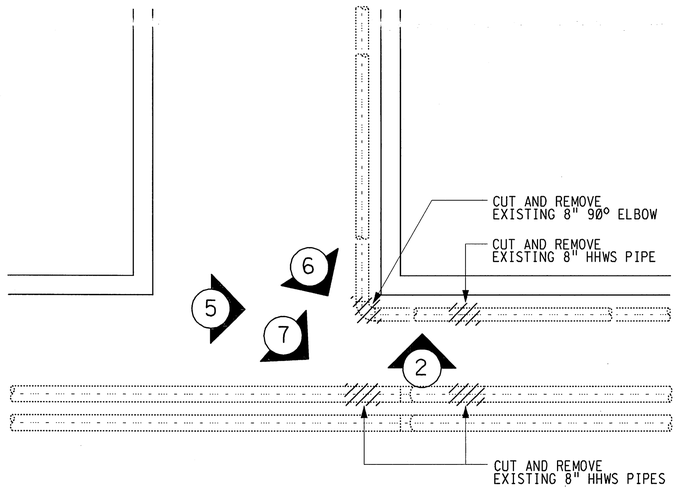

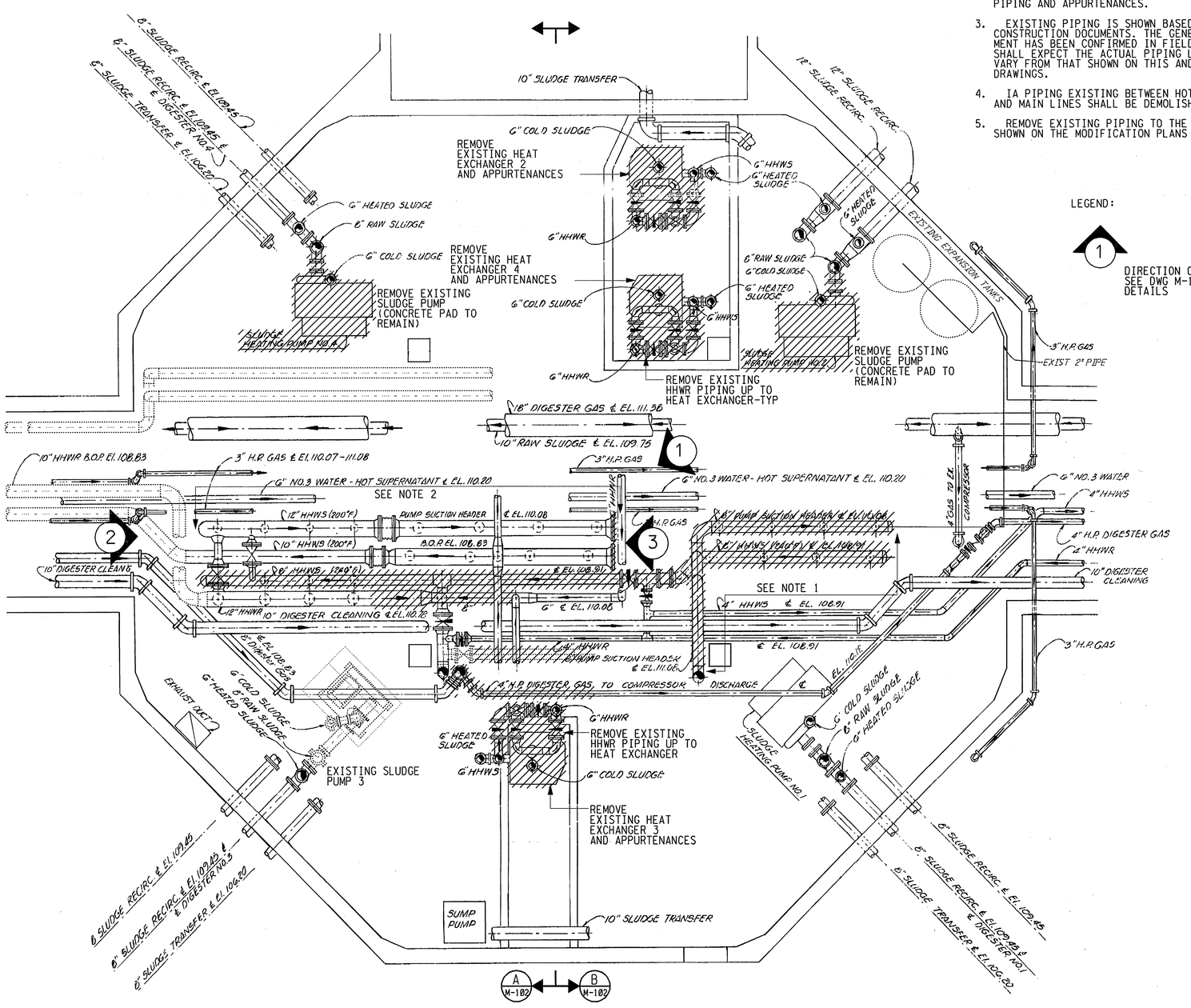

PARTIAL PLAN
1/4" = 1'-0

BY CONSULTANT
29-JUL-2003 16:58
P:\cads\23011-EBMUD\sANewDGN\s274M101.R00

REGISTERED PROFESSIONAL ENGINEER — KRAIG MARIE STOLFUS — No. C35503 — Exp. 09-30-03 — CIVIL — STATE OF CALIFORNIA

REGISTERED PROFESSIONAL ENGINEER — JAMES L. BARTLETT — No. 23550 — Exp. 09-30-05 — MECHANICAL — STATE OF CALIFORNIA

3" ON ORIGINAL DOCUMENT
0 1 2 3

NO.	DATE		BY	REC.

BROWN AND CALDWELL

DESIGNED BY ADR	PROJECT ENGR. R.P.E. NO.
DESIGN CHECKED BY JLB	
DRAWN BY HK	PROJECT MGR. DONALD KIANG R.P.E. NO. C29341
SR. PROJ ENGR. R.P.E. NO. C35503	
APPROVED TMS	RECOMMENDED SR. ENGR. OLUJIMI YOLOYE R.P.E. NO. C44278
PRINCIPAL IN CHARGE, R.P.E. NO. C35503	

EBMUD REVIEW

EAST BAY MUNICIPAL UTILITY DISTRICT
SPECIAL DISTRICT No. 1
OAKLAND, CALIFORNIA

MWWTP
DIGESTER HEATING SYSTEM IMPROVEMENTS
MECHANICAL
DIGESTER CONTROL BUILDING
BASEMENT LEVEL DEMOLITION PLAN

FACILITY: MWWTP	DRAWING No. SD274-M-101
SCALE: 1/4" = 1'-0"	
DATE: APRIL 2003	SHEET 10 OF 44

SPECIFICATION NO: SD274

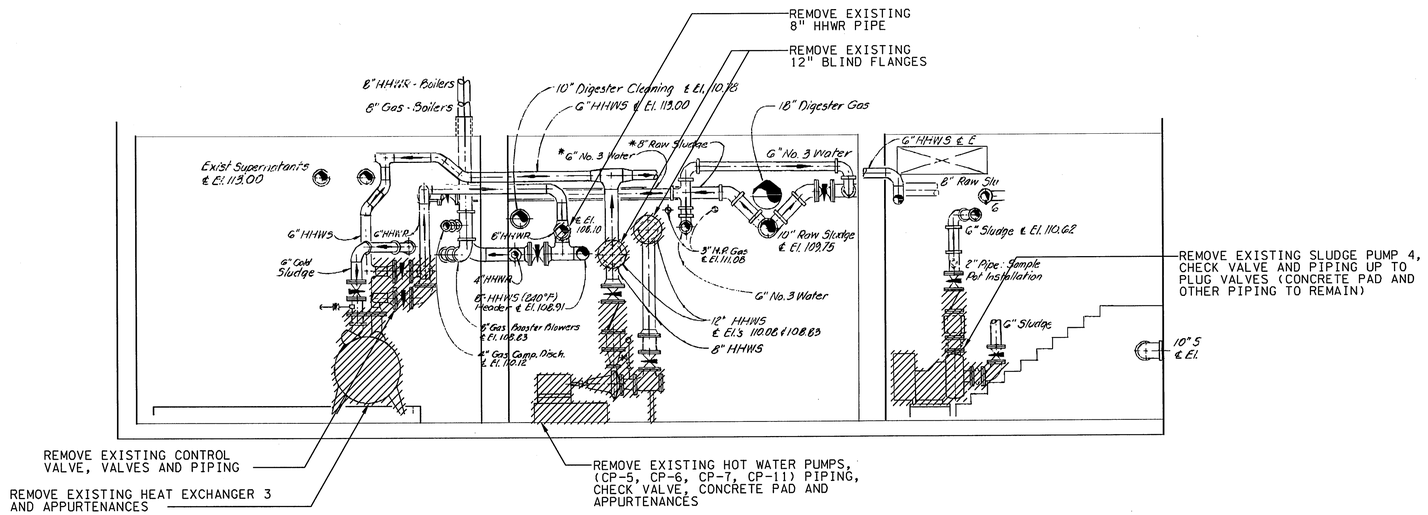

SECTION A
1/4" = 1'-0 M-101

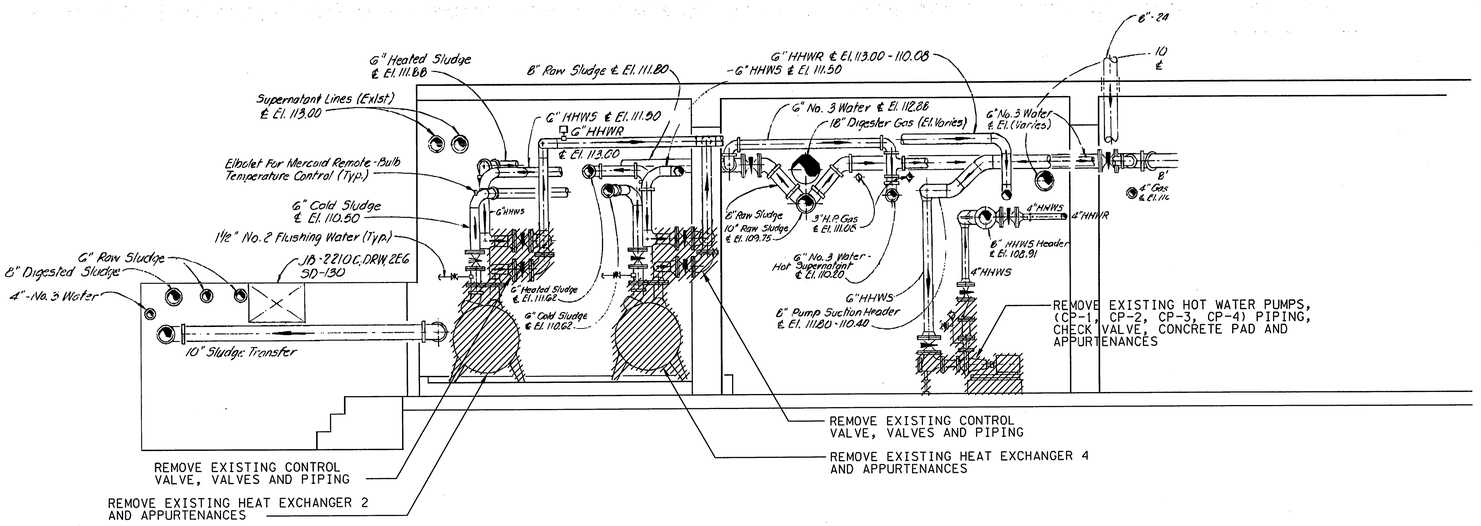

SECTION B
1/4" = 1'-0 M-101

BY CONSULTANT
29-JUL-2003 17:00
P:<cad>23011-EBMUD<ANewDGN>274M102.R00

REGISTERED PROFESSIONAL ENGINEER TRACY MARIE STIGERS No. C35503 Exp. 09-30-03 CIVIL STATE OF CALIFORNIA

REGISTERED PROFESSIONAL ENGINEER JAMES L. BARTLETT No. 23550 Exp. 09-30-05 MECHANICAL STATE OF CALIFORNIA

3" ON ORIGINAL DOCUMENT
0 1 2 3

NO.	DATE		BY	REC.

BROWN AND CALDWELL

DESIGNED BY ADR
DESIGN CHECKED BY JLB
DRAWN BY HK
SR. PROJ ENGR. R.P.E. NO. C35503
APPROVED TMS
PRINCIPAL IN CHARGE, R.P.E. NO. C35503

EBMUD REVIEW
PROJECT ENGR. R.P.E. NO.
PROJECT MGR. DONALD KIANG R.P.E. NO. C29341
RECOMMENDED SR. ENGR. OLUJIMI YOLOYE R.P.E. NO. C44278

EAST BAY MUNICIPAL UTILITY DISTRICT
SPECIAL DISTRICT No. 1
OAKLAND, CALIFORNIA

MWWTP
DIGESTER HEATING SYSTEM IMPROVEMENTS
MECHANICAL
DIGESTER CONTROL BUILDING
BASEMENT LEVEL DEMOLITION SECTIONS

FACILITY: MWWTP
SCALE: 1/4" = 1'-0
DATE: APRIL 2003
DRAWING No. SD274-M-102
SHEET 11 OF 44
SPECIFICATION NO: SD274

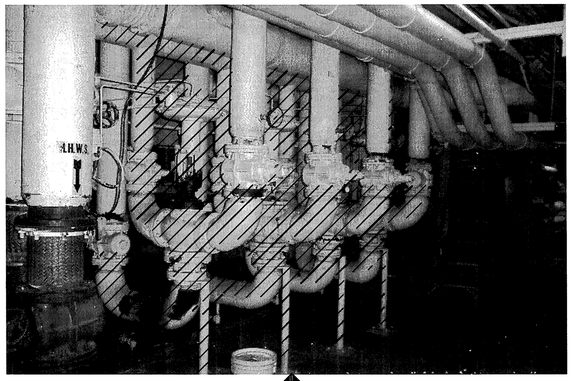

1

(SEE NOTE 1)

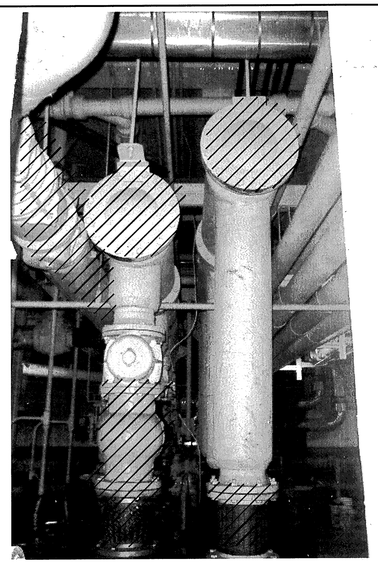

3

(SEE NOTE 3)

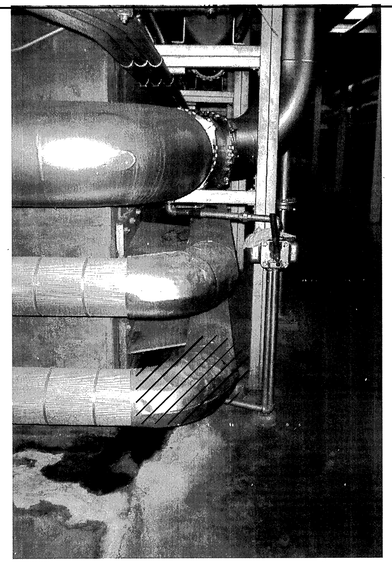

5

(SEE NOTE 5)

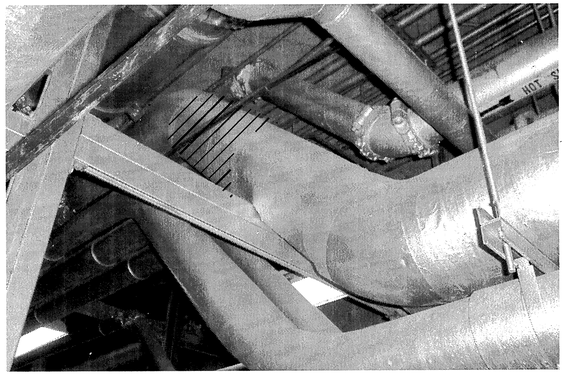

7

(SEE NOTE 7)

LEGEND:

1

FOR LOCATION AND ORIENTATION OF PHOTOS WHERE TAKEN SEE PLAN ON DWG M-101.

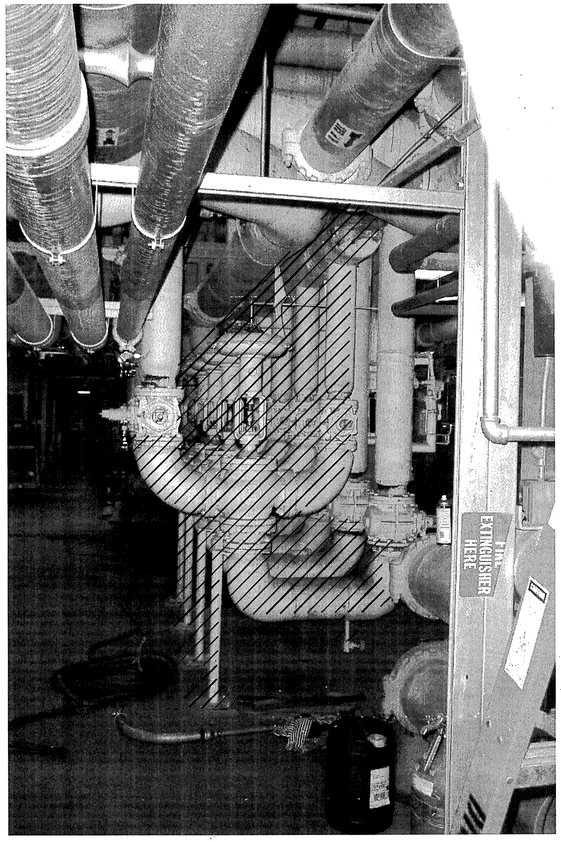

2

(SEE NOTE 2)

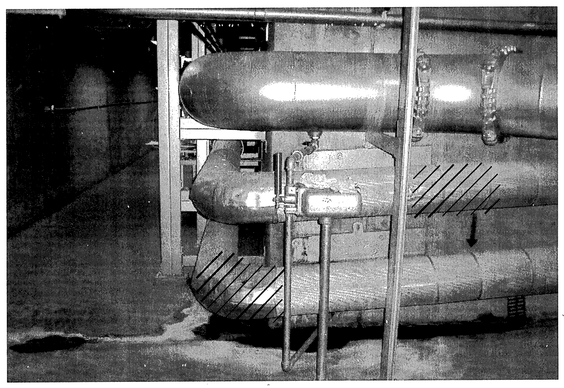

4

(SEE NOTE 4)

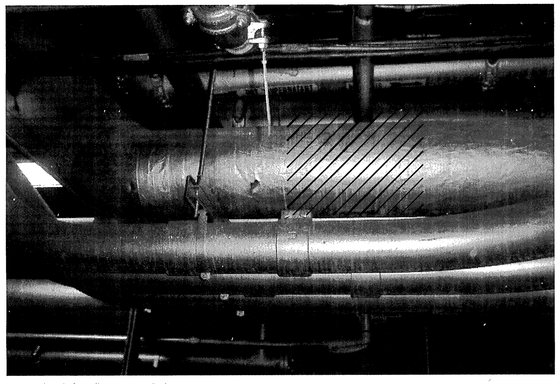

6

(SEE NOTE 6)

NOTES:

1. REMOVE EXISTING HHWS PIPING, PIPE SUPPORTS, TEMPERATURE CONTROL VALVES, APPURTENANCES AND 4" PLUG VALVES.
2. SAME AS NOTE 1.
3. REMOVE EXISTING 12" BLIND FLANGES, 8" HHWS PIPING, CHECK VALVES AND FLEXIBLE PIPE CONNECTORS.
4. CUT AND REMOVE EXISTING 8" HHWS PIPE AND 8" 90 DEGREE ELBOW.
5. CUT AND REMOVE EXISTING 8" 90 DEGREE ELBOW.
6. CUT AND REMOVE EXISTING 10" HHWR PIPE.
7. CUT AND REMOVE EXISTING 10" HHWR PIPE AT MID POINT BETWEEN THE 2 EXISTING 45 DEGREE FITTINGS.

REGISTERED PROFESSIONAL ENGINEER
TROY MARIE STEERS
No. C35503
Exp. 09-30-03
CIVIL
STATE OF CALIFORNIA

REGISTERED PROFESSIONAL ENGINEER
JAMES L. BARTLETT
No. 23550
Exp. 09-30-05
MECHANICAL
STATE OF CALIFORNIA

3" ON ORIGINAL DOCUMENT
0 1 2 3

NO.	DATE		BY	REC.
0				

BROWN AND CALDWELL

DESIGNED BY ADR
DESIGN CHECKED BY JLB
DRAWN BY HK
SR. PROJ ENGR. R.P.E. NO. C35503
APPROVED TMS
PRINCIPAL IN CHARGE, R.P.E. NO. C35503

EBMUD REVIEW
PROJECT ENGR. R.P.E. NO.
PROJECT MGR. DONALD KIANG R.P.E. NO. C29341
RECOMMENDED SR. ENGR. OLUJIMI YOLOYE R.P.E. NO. C44218

EAST BAY MUNICIPAL UTILITY DISTRICT
SPECIAL DISTRICT No. 1
OAKLAND, CALIFORNIA

MWWTP
DIGESTER HEATING SYSTEM IMPROVEMENTS
MECHANICAL
DIGESTER CONTROL BUILDING
BASEMENT LEVEL DEMOLITION PHOTO DETAILS

FACILITY: MWWTP
SCALE: NO SCALE
DATE: APRIL 2003
DRAWING NO. SD274-M-103
SHEET 12 OF 44

SPECIFICATION NO: SD274

BY CONSULTANT
29-JUL-2003 18:12
P:\ccd\23011-EBMUD\ANewDGN\274M103.R00

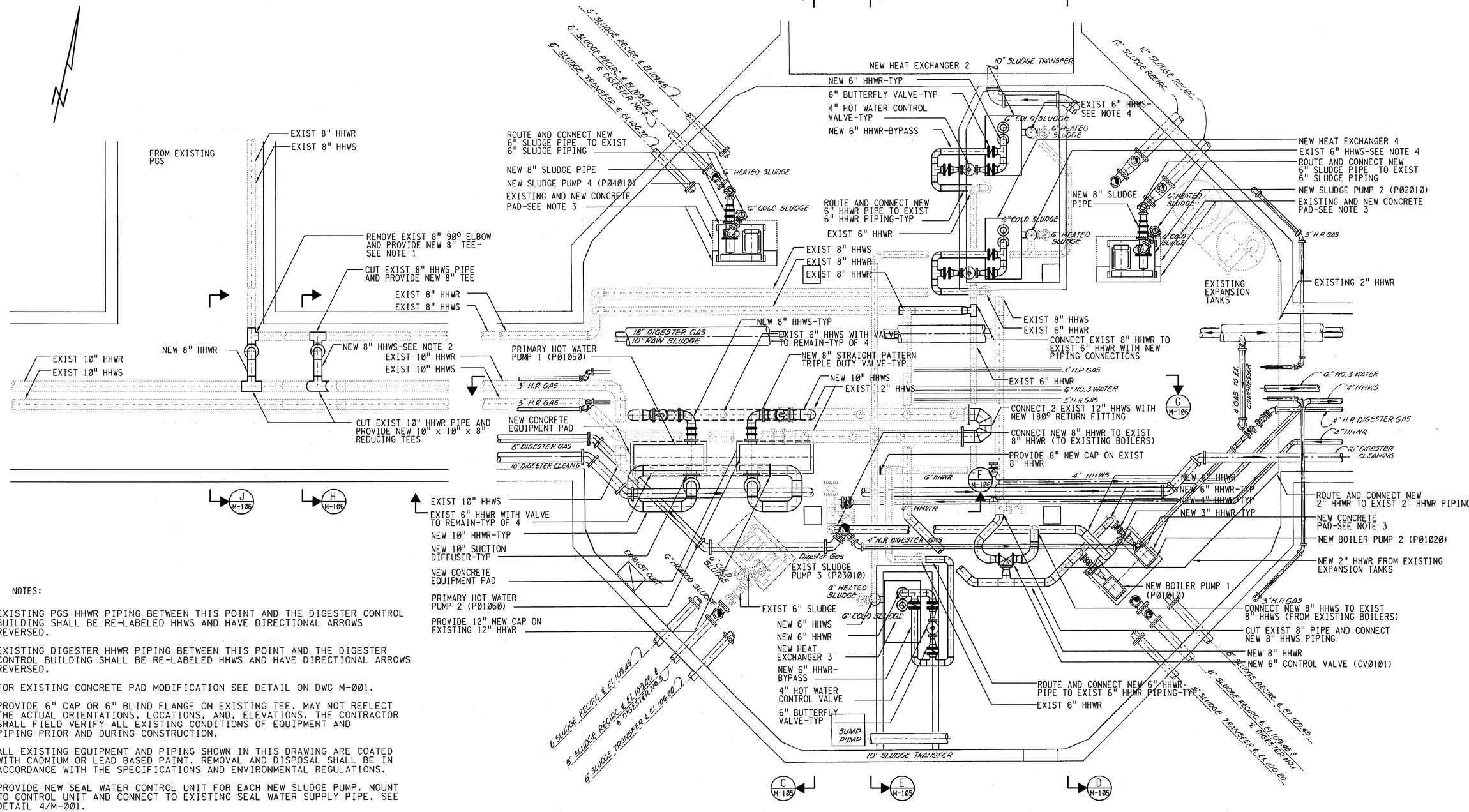

NOTES:

1. EXISTING PGS HHWR PIPING BETWEEN THIS POINT AND THE DIGESTER CONTROL BUILDING SHALL BE RE-LABELED HHWS AND HAVE DIRECTIONAL ARROWS REVERSED.
2. EXISTING DIGESTER HHWR PIPING BETWEEN THIS POINT AND THE DIGESTER CONTROL BUILDING SHALL BE RE-LABELED HHWS AND HAVE DIRECTIONAL ARROWS REVERSED.
3. FOR EXISTING CONCRETE PAD MODIFICATION SEE DETAIL ON DWG M-001.
4. PROVIDE 6" CAP OR 6" BLIND FLANGE ON EXISTING TEE. MAY NOT REFLECT THE ACTUAL ORIENTATIONS, LOCATIONS, AND, ELEVATIONS. THE CONTRACTOR SHALL FIELD VERIFY ALL EXISTING CONDITIONS OF EQUIPMENT AND PIPING PRIOR AND DURING CONSTRUCTION.
5. ALL EXISTING EQUIPMENT AND PIPING SHOWN IN THIS DRAWING ARE COATED WITH CADMIUM OR LEAD BASED PAINT. REMOVAL AND DISPOSAL SHALL BE IN ACCORDANCE WITH THE SPECIFICATIONS AND ENVIRONMENTAL REGULATIONS.
6. PROVIDE NEW SEAL WATER CONTROL UNIT FOR EACH NEW SLUDGE PUMP. MOUNT TO CONTROL UNIT AND CONNECT TO EXISTING SEAL WATER SUPPLY PIPE. SEE DETAIL 4/M-001.

PARTIAL PLAN

1/4" = 1'-0

BY CONSULTANT
29-JUL-2003 17:13
P:\ccd\23011-EBMUD\ANewDGN\S274M104.R00

REGISTERED PROFESSIONAL ENGINEER — TRACY MARIE STEERS — No. C35503 — Exp. 09-30-03 — CIVIL — STATE OF CALIFORNIA

REGISTERED PROFESSIONAL ENGINEER — JAMES L. BARTLETT — No. 23550 — Exp. 09-30-05 — MECHANICAL — STATE OF CALIFORNIA

3" ON ORIGINAL DOCUMENT
0 1 2 3

NO.	DATE		BY	REC.

BROWN AND CALDWELL

DESIGNED BY ADR
DESIGN CHECKED BY JLB
DRAWN BY HK
SR. PROJ ENGR. R.P.E. NO. C35503
APPROVED TWS
PRINCIPAL IN CHARGE, R.P.E. NO. C35503

EBMUD REVIEW
PROJECT ENGR. R.P.E. NO.
PROJECT MGR., DONALD KIANG R.P.E. NO. C29341
RECOMMENDED SR. ENGR., OLUJIMI YOLOYE R.P.E. NO. C44278

EAST BAY MUNICIPAL UTILITY DISTRICT
SPECIAL DISTRICT No. 1
OAKLAND, CALIFORNIA

MWWTP
DIGESTER HEATING SYSTEM IMPROVEMENTS
MECHANICAL
DIGESTER CONTROL BUILDING
BASEMENT LEVEL MODIFICATION PLAN

FACILITY: MWWTP
SCALE: 1/4" = 1'-0
DATE: APRIL 2003
DRAWING No. SD274-M-104
SHEET 13 OF 44

SPECIFICATION NO: SD274

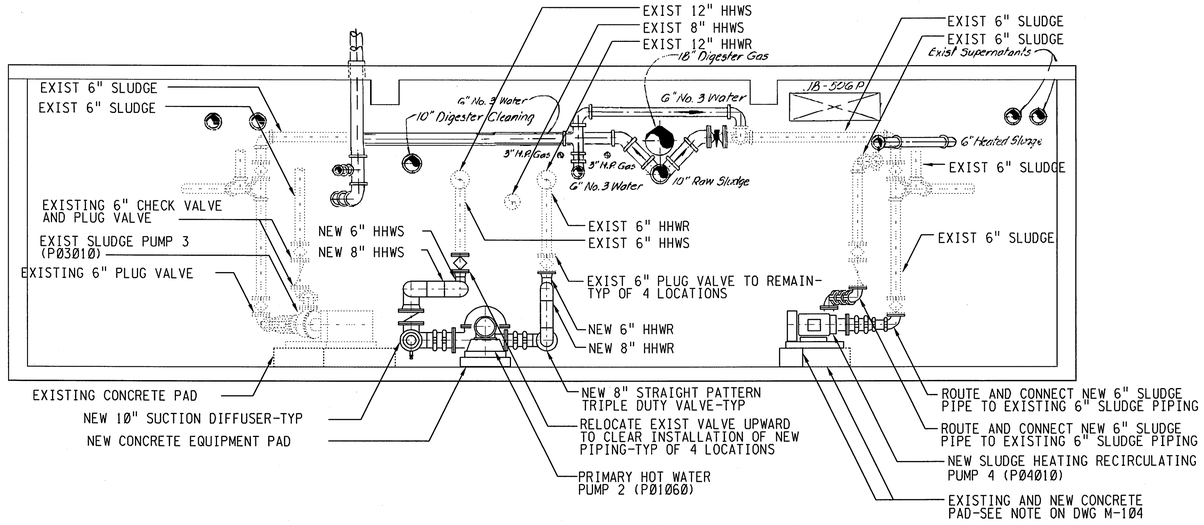

SECTION C
1/4" = 1'-0 M-104

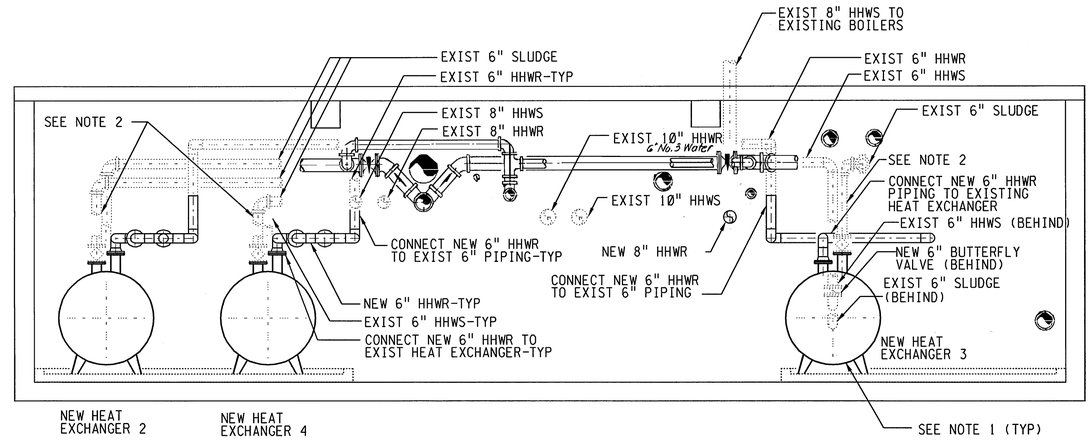

SECTION E
1/4" = 1'-0 M-104

NOTE:

1. PROVIDE NEW CONCRETE PAD TO FIT NEW HEAT EXCHANGERS. NEW PAD TO MATCH EXISTING FORM.
2. REMOVE AND SHORTEN SEGMENTS AS NECESSARY TO ACCOMMODATE NEW HEX AND EXISTING VALVE.

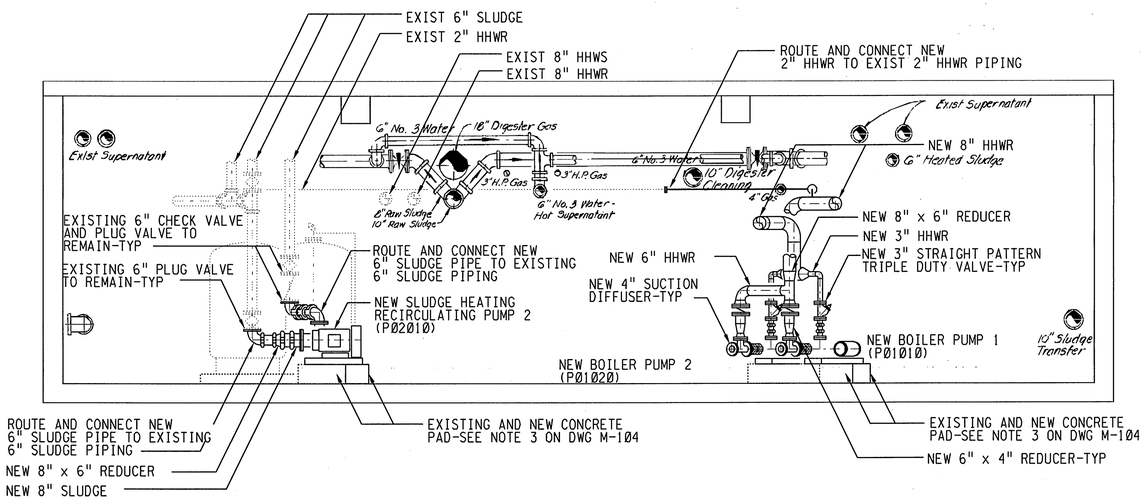

SECTION D
1/4" = 1'-0 M-104

BY CONSULTANT
29-JUL-2003 17:15
P:\cad\s23011-EBMUD\SANewDGN\S274M105.R00

REGISTERED PROFESSIONAL ENGINEER — TRACY MARIE SYDERS — No. C35503 Exp. 09-30-03 — CIVIL — STATE OF CALIFORNIA

REGISTERED PROFESSIONAL ENGINEER — JAMES L. BARTLETT — No. 23550 Exp. 09-30-05 — MECHANICAL — STATE OF CALIFORNIA

3" ON ORIGINAL DOCUMENT
0 1 2 3

NO.	DATE		BY	REC.

BROWN AND CALDWELL

DESIGNED BY ADR	PROJECT ENGR. R.P.E. NO.
DESIGN CHECKED BY JLB	
DRAWN BY HK	PROJECT MGR. DONALD KIANG R.P.E. NO. C29341
SR. PROJ ENGR. R.P.E. NO. C35503	
APPROVED TMS	RECOMMENDED SR. ENGR. OLUJIMI YOLOYE R.P.E. NO. C44218
PRINCIPAL IN CHARGE, R.P.E. NO. C35503	

EBMUD REVIEW

EAST BAY MUNICIPAL UTILITY DISTRICT
SPECIAL DISTRICT No. 1
OAKLAND, CALIFORNIA

MWWTP
DIGESTER HEATING SYSTEM IMPROVEMENTS
MECHANICAL
EQUIPMENT BUILDING 1
BASEMENT LEVEL MODIFICATION SECTION 1

FACILITY: MWWTP	DRAWING No. SD274-M-105
SCALE: 1/4" = 1'-0	
DATE: APRIL 2003	SHEET 14 OF 44

SPECIFICATION NO: SD274

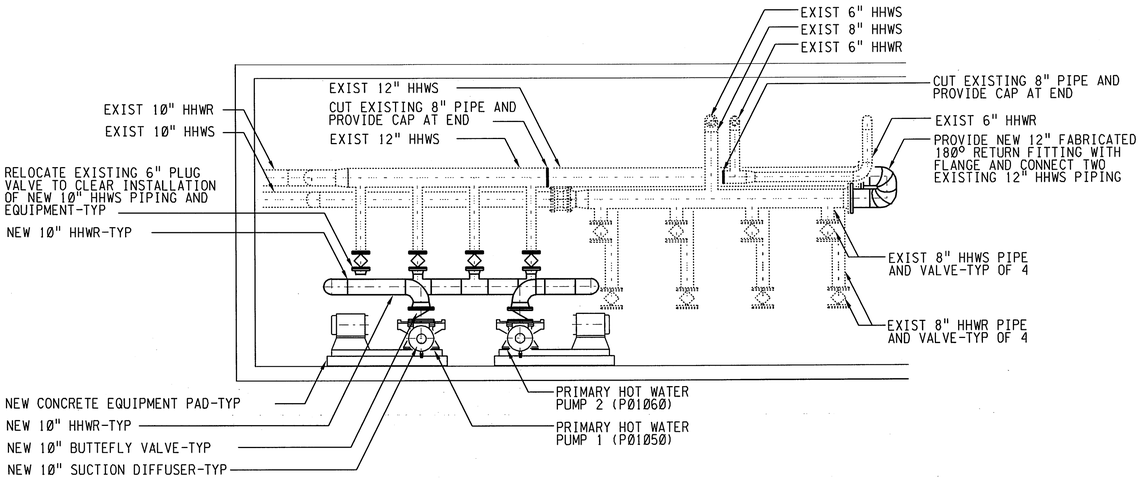

SECTION F
1/4" = 1'-0 M-104

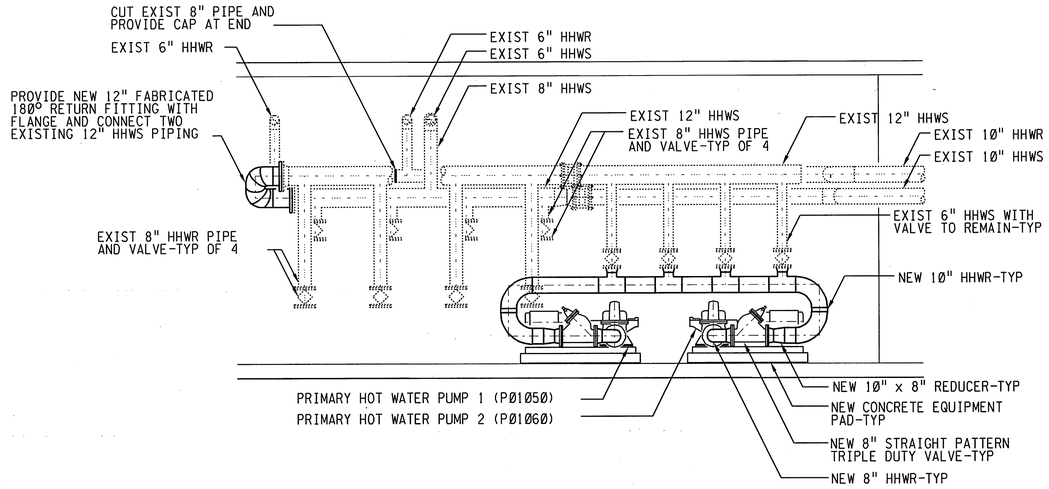

SECTION G
1/4" = 1'-0 M-104

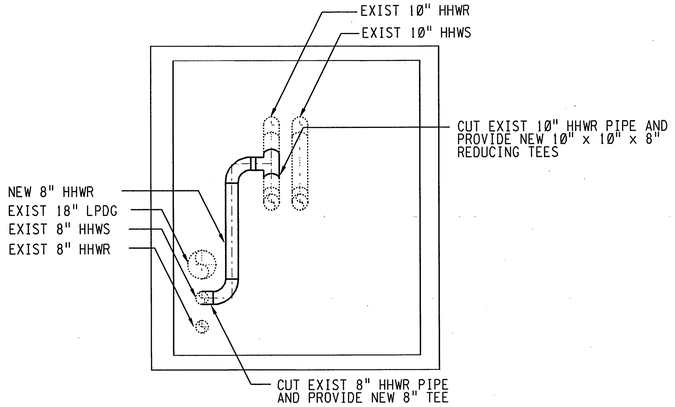

SECTION H
1/4" = 1'-0 M-104

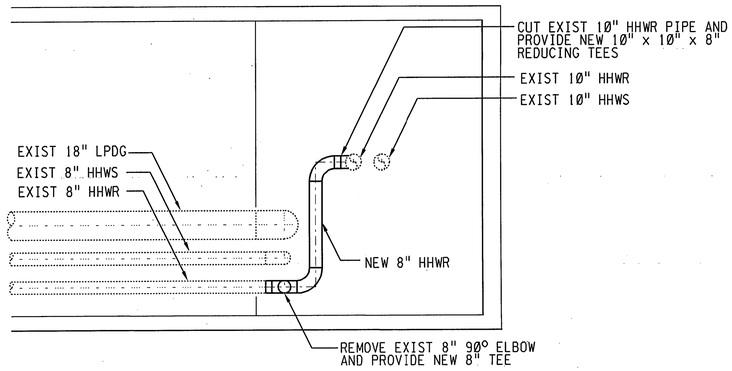

SECTION J
1/4" = 1'-0 M-104

BY CONSULTANT
29-JUL-2003 17:18
P:\ecad\23011-EBMUD\ANewDGN\S274M106.R00

REGISTERED PROFESSIONAL ENGINEER
TRACY MARIE STEERS
No. C35503
Exp. 09-30-03
CIVIL
STATE OF CALIFORNIA

REGISTERED PROFESSIONAL ENGINEER
JAMES L. BARTLETT
No. 23550
Exp. 09-30-05
MECHANICAL
STATE OF CALIFORNIA

3" ON ORIGINAL DOCUMENT
0 1 2 3

NO.	DATE		BY	REC.

BROWN AND CALDWELL

DESIGNED BY ADR
DESIGN CHECKED BY JLB
DRAWN BY HK
SR. PROJ ENGR. R.P.E. NO. C35503
APPROVED TWS
PRINCIPAL IN CHARGE, R.P.E. NO. C35503

EBMUD REVIEW
PROJECT ENGR. R.P.E. NO.
PROJECT MGR. DONALD KIANG R.P.E. NO. C29341
RECOMMENDED SR. ENGR. OLUJIMI YOLOYE R.P.E. NO. C44278

EAST BAY MUNICIPAL UTILITY DISTRICT
SPECIAL DISTRICT No. 1
OAKLAND, CALIFORNIA

MWWTP
DIGESTER HEATING SYSTEM IMPROVEMENTS
MECHANICAL
DIGESTER CONTROL BUILDING
BASEMENT LEVEL MODIFICATION SECTIONS 2

FACILITY: MWWTP
SCALE: 1/4" = 1'-0
DATE: APRIL 2003
DRAWING No. SD274-M-106
SHEET 15 OF 44
SPECIFICATION NO: SD274

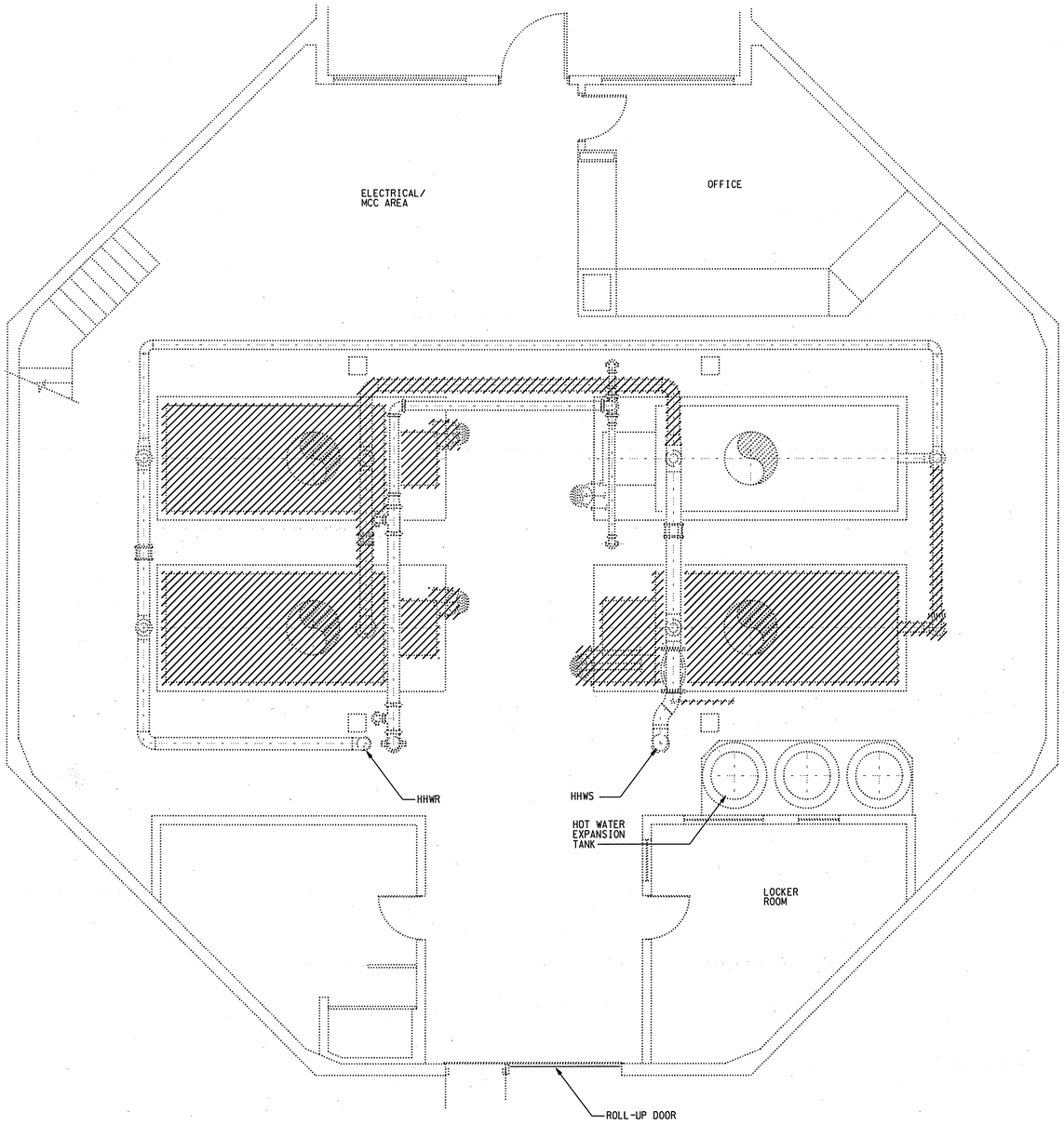

PLAN

NOTES:

1. REMOVE BOILERS AS SHOWN, INCLUDING ASSOCIATED PIPING, ELECTRICAL CABLE AND CONDUIT.
2. DEMO BOILER CONCRETE PADS AND GRIND TO 1" BELOW EXISTING FLOOR LEVEL AND RESURFACE WITH NON-SHRINK EPOXY GROUT TO MATCH EXISTING FLOOR LEVEL AND SLOPE.
3. REMOVE PIPING AS INDICATED, INCLUDING PIPE HANGERS AND SUPPORTS. PROVIDE BLIND FLANGE AT INTERFACE BETWEEN DEMOLISHED AND REMAINING PIPE.
4. REMOVE BOILER EXHAUST STACK TO 1' BELOW CEILING PENETRATION. CEILING OPENING AND RAIN CAP SHALL REMAIN.

REGISTERED PROFESSIONAL ENGINEER
ROCKY MARIE STEVENS
No. C35503
Exp. 09-30-03
CIVIL
STATE OF CALIFORNIA

REGISTERED PROFESSIONAL ENGINEER
JAMES L. BARTLETT
No. 23550
Exp. 09-30-05
MECHANICAL
STATE OF CALIFORNIA

3" ON ORIGINAL DOCUMENT
0 1 2 3

NO.	DATE		BY	REC.
1	05-03	ADDENDOM No. 1	AR	

BROWN AND CALDWELL

DESIGNED BY ADR	PROJECT ENGR. R.P.E. NO.
DESIGN CHECKED BY JLB	
DRAWN BY HK	PROJECT MGR. DONALD KIANG R.P.E. NO. C29341
SR. PROJ ENGR. R.P.E. NO. C35503	
APPROVED TMS	RECOMMENDED SR. ENGR. OLUJIMI YOLOYE R.P.E. NO. C44218
PRINCIPAL IN CHARGE, R.P.E. NO. C35503	

EBMUD REVIEW

EAST BAY MUNICIPAL UTILITY DISTRICT
SPECIAL DISTRICT No. 1
OAKLAND, CALIFORNIA

MWWTP
DIGESTER HEATING SYSTEM IMPROVEMENTS
MECHANICAL
DIGESTER CONTROL BUILDING
BOILE ROOM DEMOLITION PLAN

FACILITY: MWWTP	DRAWING No. SD274-M-107
SCALE: 1/4" = 1'-0	
DATE: MAY 2003	SHEET 154 OF 44

SPECIFICATION NO: SD274

BY CONSULTANT
30-JUL-2003 07:13
P:\sdd\23011-EBMUD\BOILER dwgs\274M107.dgn

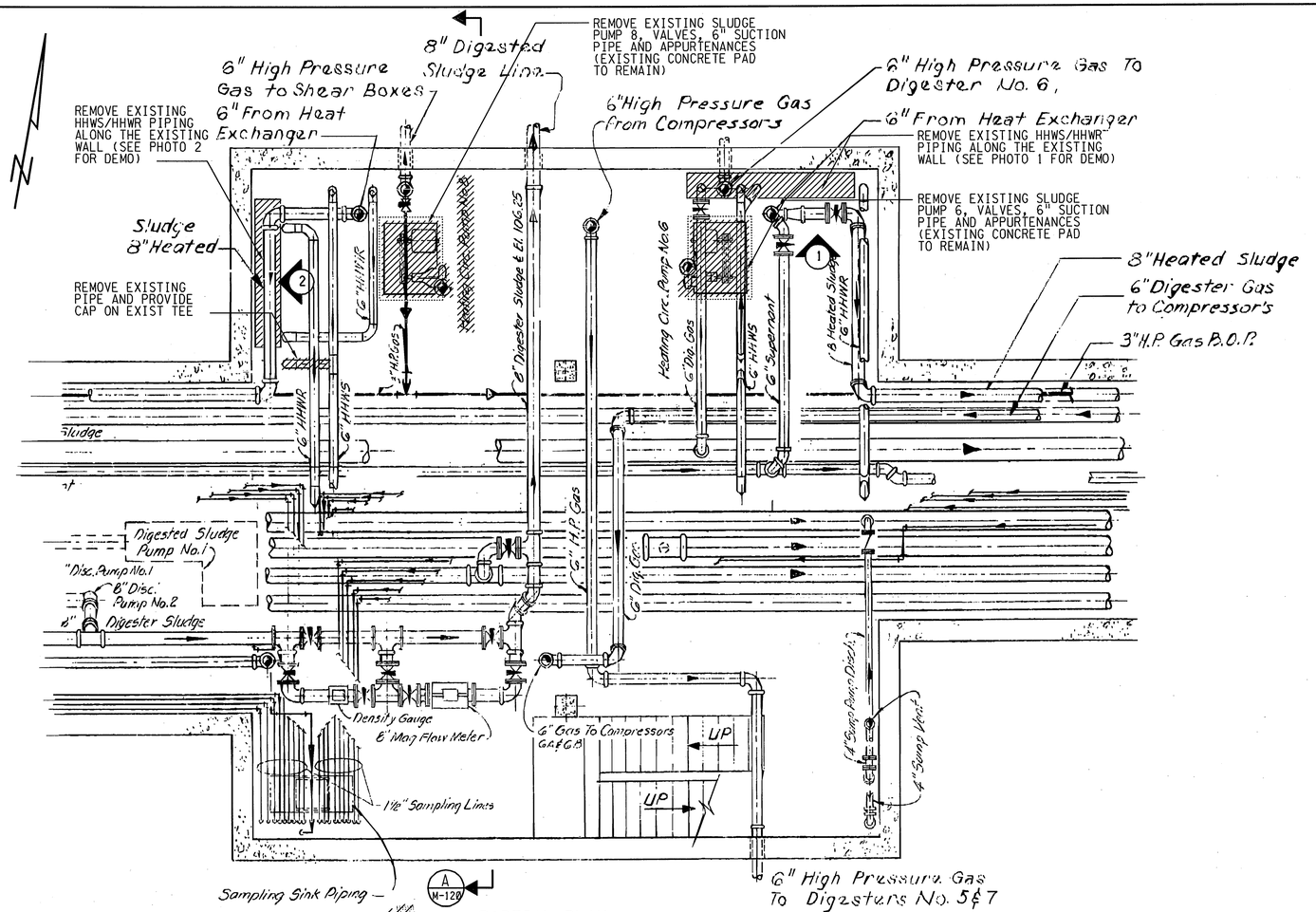

PARTIAL PLAN

1/4" = 1'-0

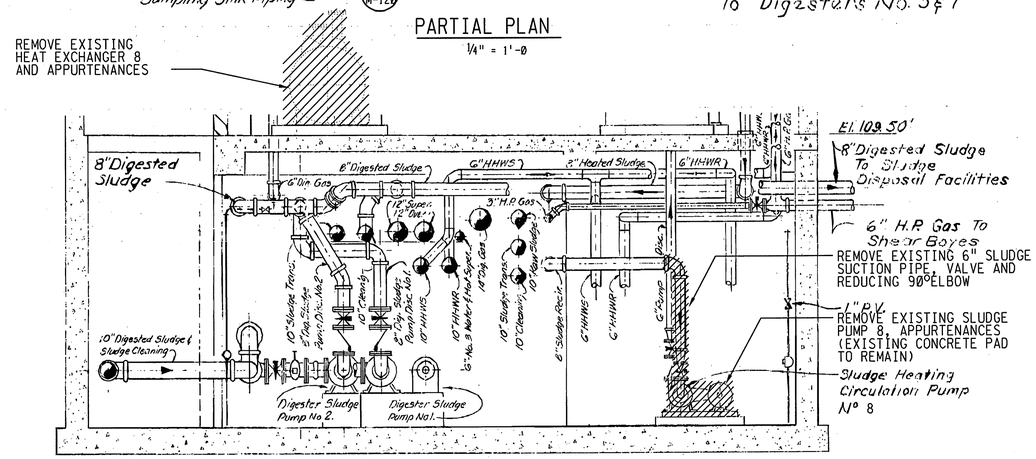

SECTION A M-120

1/4" = 1'-0

NOTE:

1. CUT AND REMOVE EXISTING PIPES, PIPE SUPPORTS, VALVES, AND APPURTENANCES. PROVIDE NEW CAP WHERE PIPE WAS CUT.

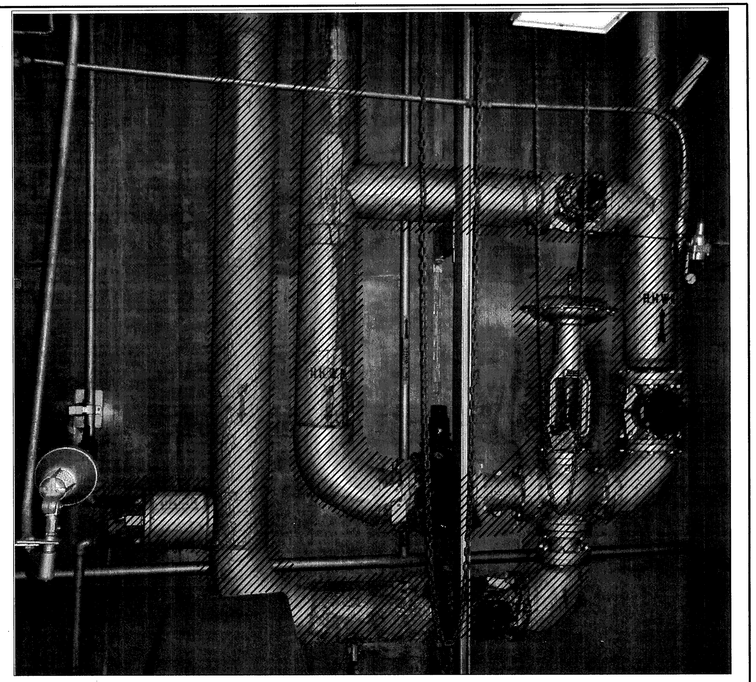

1

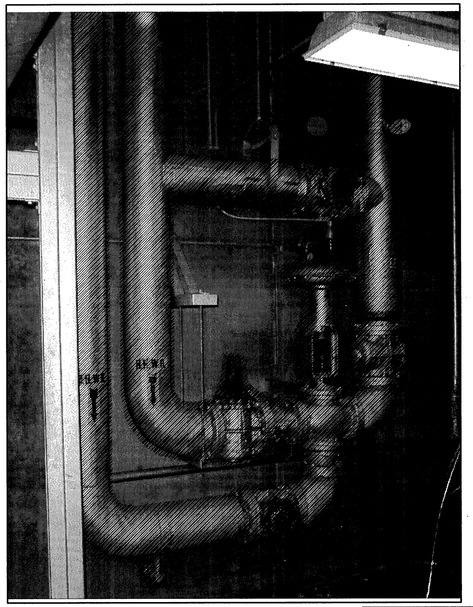

2

3" ON ORIGINAL DOCUMENT

0 1 2 3

NO.	DATE		BY	REC.

BROWN AND CALDWELL

DESIGNED BY ADR
DESIGN CHECKED BY JLB
DRAWN BY HK
SR. PROJ ENGR. R.P.E. NO. C35503
APPROVED TWS
PRINCIPAL IN CHARGE, R.P.E. NO. C35503

EBMUD REVIEW
PROJECT ENGR. R.P.E. NO.
PROJECT MGR. DONALD KIANG R.P.E. NO. C29341
RECOMMENDED SR. ENGR. OLUJIMI YOLOYE R.P.E. NO. C44278

REGISTERED PROFESSIONAL ENGINEER TRACY MARIE SUEFERT No. C35503 Exp. 09-30-03 CIVIL STATE OF CALIFORNIA

REGISTERED PROFESSIONAL ENGINEER JAMES L. GARTLETT No. 23550 Exp. 09-30-05 MECHANICAL STATE OF CALIFORNIA

EAST BAY MUNICIPAL UTILITY DISTRICT
SPECIAL DISTRICT No. 1
OAKLAND, CALIFORNIA

MWWTP
DIGESTER HEATING SYSTEM IMPROVEMENTS
MECHANICAL
EQUIPMENT BUILDING 1
BASEMENT LEVEL DEMOLITION PLAN AND SECTIONS

FACILITY: MWWTP
SCALE: 1/4" = 1'-0
DATE: APRIL 203
DRAWING No. SD274-M-120
SHEET 16 OF 44

SPECIFICATION NO: SD274

BY CONSULTANT
29-JUL-2003 17:21
P:\sdd\s23111-EBMUD\dNewDGN\s274M120.R00

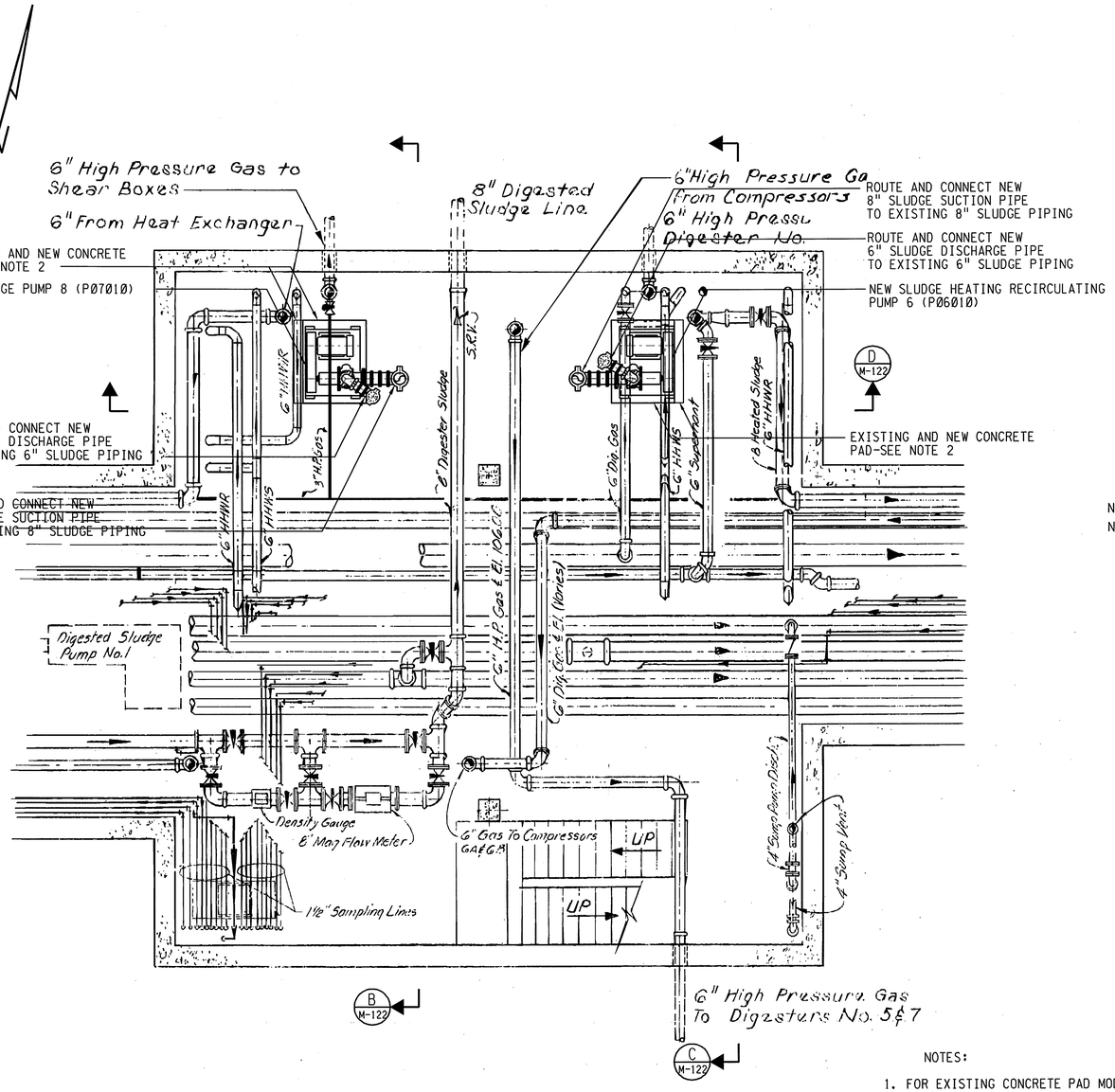

BASEMENT PARTIAL PLAN

1/4" = 1'-0

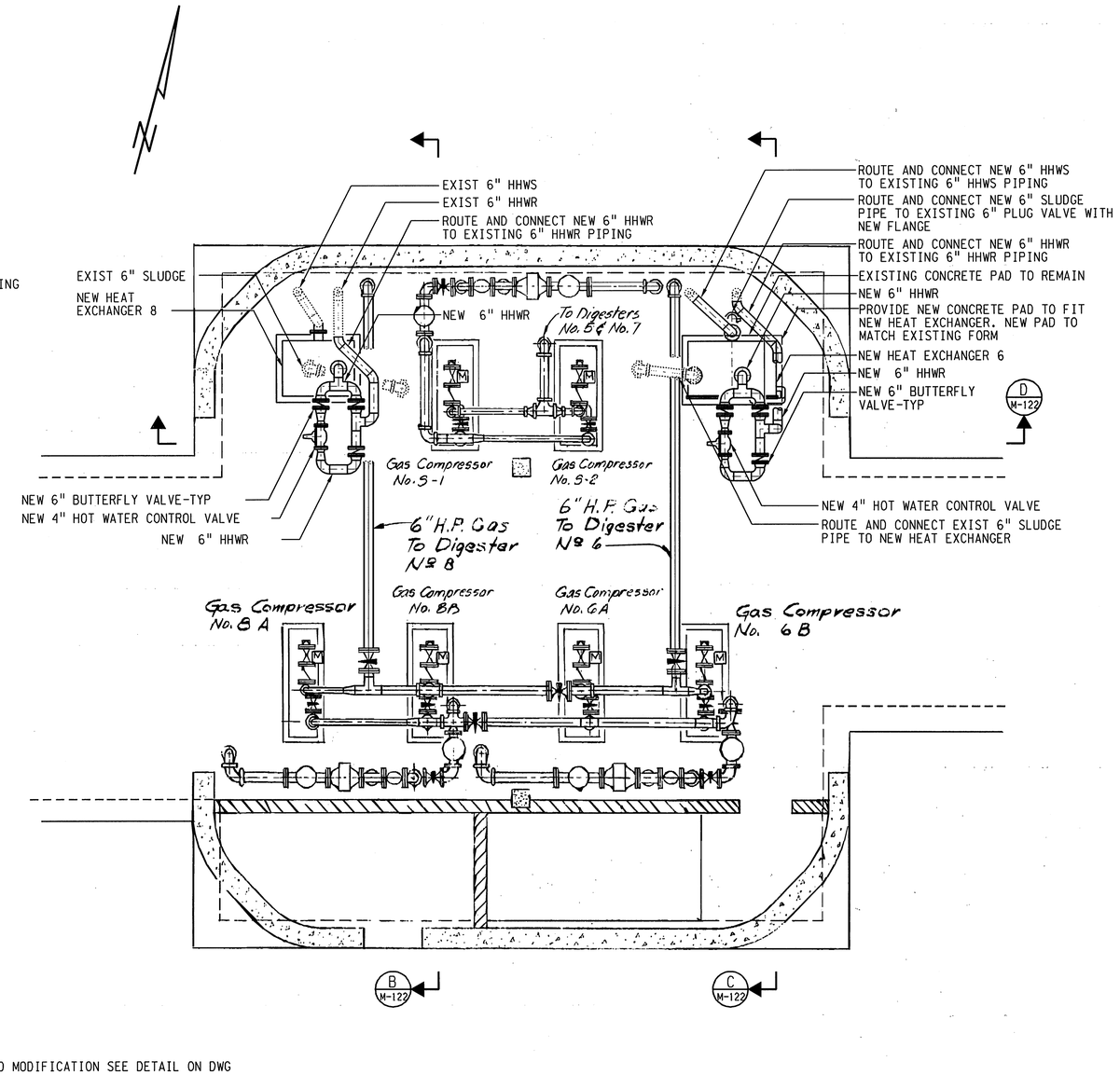

GROUND FLOOR PARTIAL PLAN

1/4" = 1'-0

NOTES:

1. FOR EXISTING CONCRETE PAD MODIFICATION SEE DETAIL ON DWG M-001.
2. ALL EXISTING EQUIPMENT AND PIPING SHOWN IN THIS DRAWING MAY NOT REFLECT THE ACTUAL ORIENTATIONS, LOCATIONS, AND, ELEVATIONS. THE CONTRACTOR SHALL FIELD VERIFIED ALL EXISTING CONDITIONS OF EQUIPMENT AND PIPING PRIOR AND DURING CONSTRUCTION.
3. SEE NOTE 6 ON DWG M-104.

BY CONSULTANT
29-JUL-2003 17:23
P:\sd\d23011-EBMUD\aNewDGN\s274M121.R00

REGISTERED PROFESSIONAL ENGINEER — TROOT MARIE STAELENS — No. C35503 — Exp. 09-30-03 — CIVIL — STATE OF CALIFORNIA

REGISTERED PROFESSIONAL ENGINEER — JAMES L. BARTLETT — No. 23550 — Exp. 09-30-05 — MECHANICAL — STATE OF CALIFORNIA

3" ON ORIGINAL DOCUMENT
0 1 2 3

NO.	DATE		BY	REC.

BROWN AND CALDWELL

DESIGNED BY ADR	PROJECT ENGR. R.P.E. NO.
DESIGN CHECKED BY JLB	
DRAWN BY HK	PROJECT MGR. DONALD KIANG R.P.E. NO. C29341
SR. PROJ ENGR. R.P.E. NO. C35503	
APPROVED TMS	RECOMMENDED SR. ENGR. OLUJIMI YOLOYE R.P.E. NO. C44278
PRINCIPAL IN CHARGE, R.P.E. NO. C35503	EBMUD REVIEW

EAST BAY MUNICIPAL UTILITY DISTRICT
SPECIAL DISTRICT No. 1
OAKLAND, CALIFORNIA

MWWTP
DIGESTER HEATING SYSTEM IMPROVEMENTS
MECHANICAL
EQUIPMENT BUILDING 1
BASEMENT LEVEL MODIFICATION PLANS

FACILITY: MWWTP	DRAWING No. SD274-M-121
SCALE: 1/4" = 1'-0	
DATE: APRIL 2003	SHEET 17 OF 44

SPECIFICATION NO: SD274

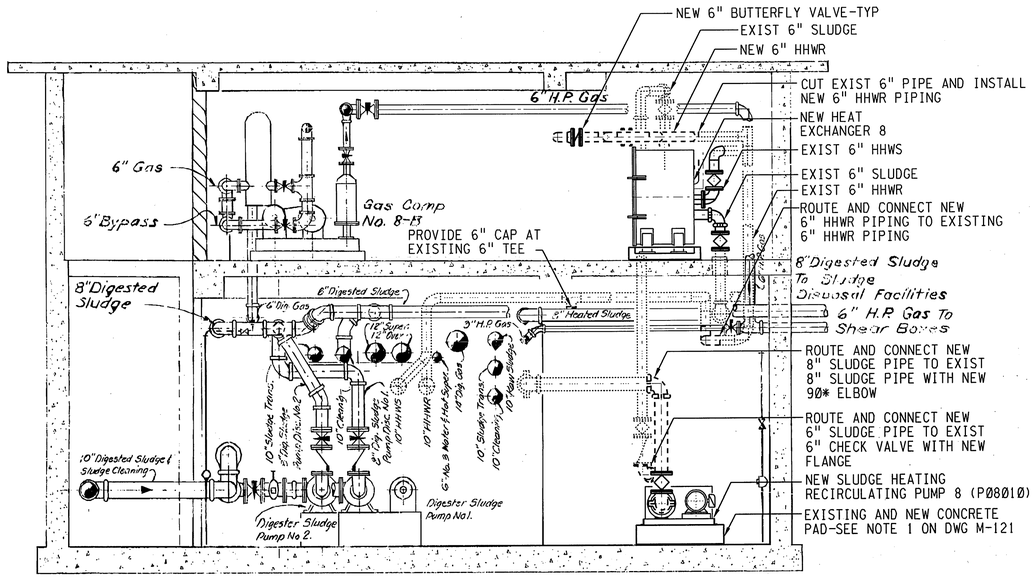

SECTION B
1/4" = 1'-0 M-121

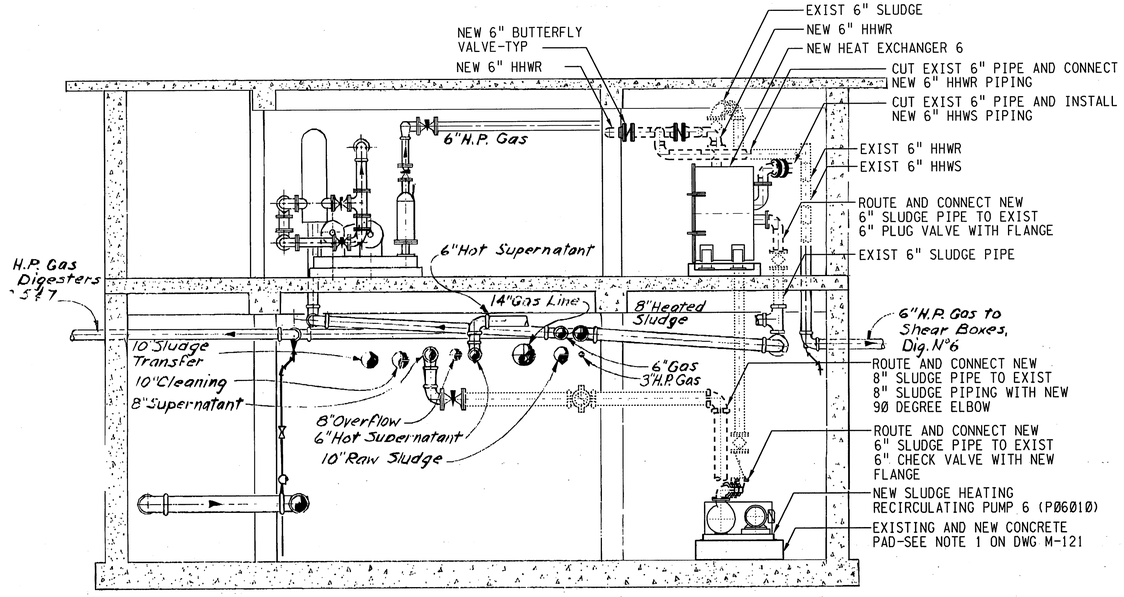

SECTION C
1/4" = 1'-0 M-121

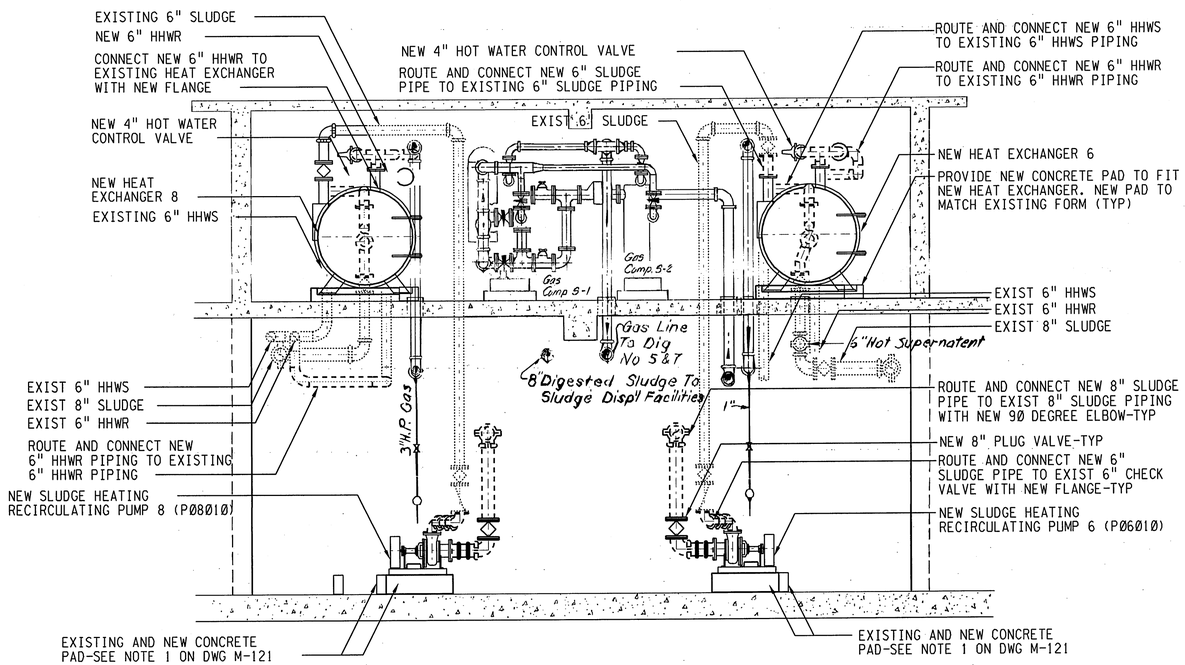

SECTION D
1/4" = 1'-0 M-121

REGISTERED PROFESSIONAL ENGINEER
TRACY MARIE STIDERS
No. C35503
Exp. 09-30-03
CIVIL
STATE OF CALIFORNIA

REGISTERED PROFESSIONAL ENGINEER
JAMES L. BARTLETT
No. 23550
Exp. 09-30-05
MECHANICAL
STATE OF CALIFORNIA

3" ON ORIGINAL DOCUMENT
0 1 2 3

NO.	DATE		BY	REC.

BROWN AND CALDWELL

DESIGNED BY ADR	PROJECT ENGR. R.P.E. NO.
DESIGN CHECKED BY JLB	
DRAWN BY HK	PROJECT MGR. DONALD KIANG R.P.E. NO. C29341
SR. PROJ ENGR. R.P.E. NO. C35503	
APPROVED TMS	RECOMMENDED SR. ENGR. OLUJIMI YOLOYE R.P.E. NO. C44278
PRINCIPAL IN CHARGE, R.P.E. NO. C35503	

EBMUD REVIEW

EAST BAY MUNICIPAL UTILITY DISTRICT
SPECIAL DISTRICT No. 1
OAKLAND, CALIFORNIA

MWWTP
DIGESTER HEATING SYSTEM IMPROVEMENTS
MECHANICAL
EQUIPMENT BUILDING 1
BASEMENT, GROUND LEVEL MODIFICATION SECTIONS

FACILITY: MWWTP	DRAWING No. SD274-M-122
SCALE: 1/4" = 1'-0	
DATE: APRIL 2003	SHEET 18 OF 44

SPECIFICATION NO: SD274

BY CONSULTANT
29-JUL-2003 17:25
P:\cgd\23011-EBMUD\ANewDGN\274M122.R00

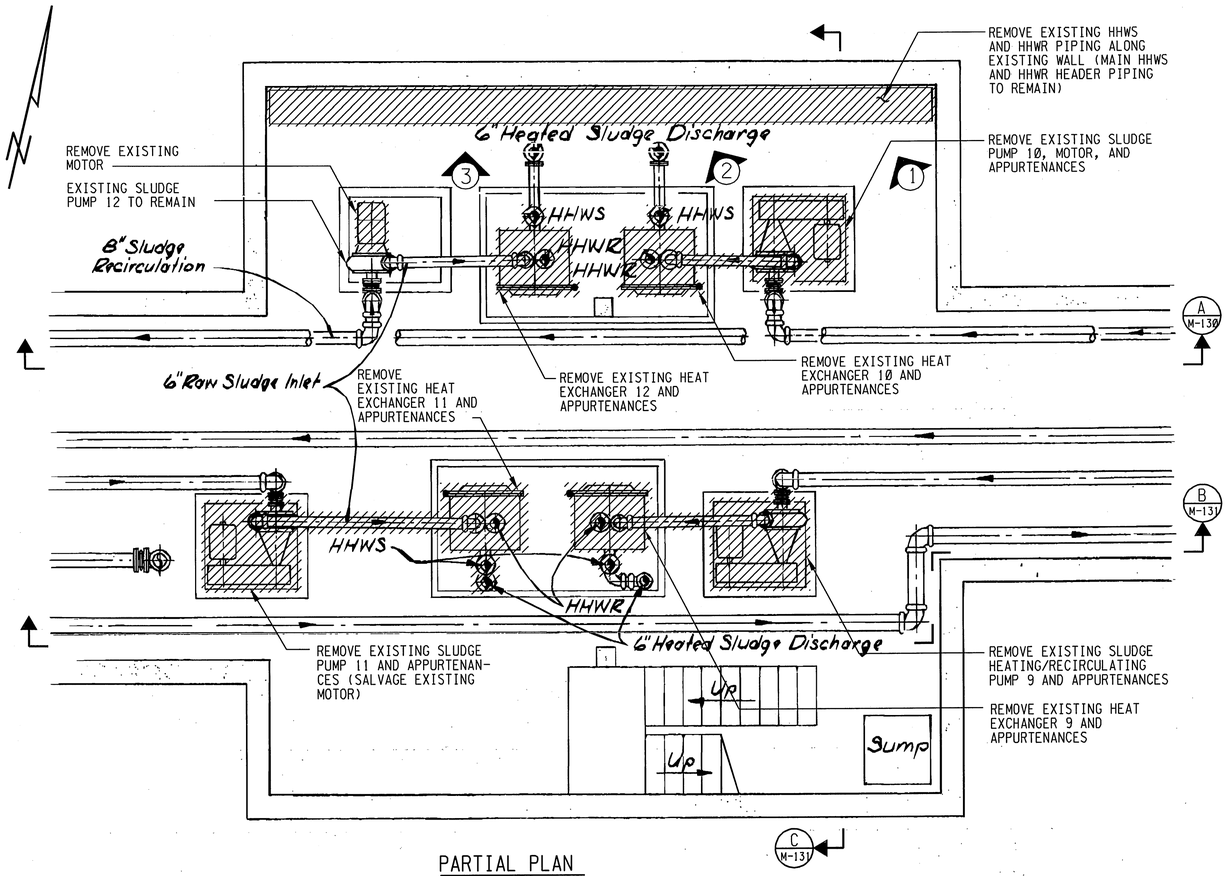

PARTIAL PLAN

1/4" = 1'-0

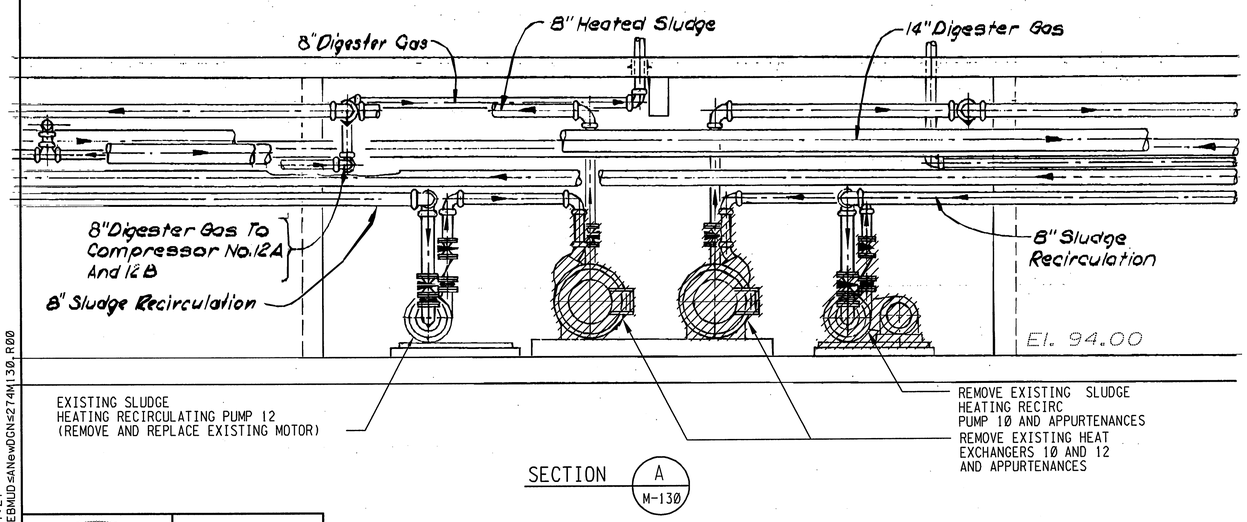

SECTION A M-130

NOTE:

1. CUT AND REMOVE EXISTING PIPES, PIPE SUPPORTS, VALVES, AND APPURTENANCES. PROVIDE NEW CAP ON REMAINING EXISTING HHWS AND HHWR PIPES.

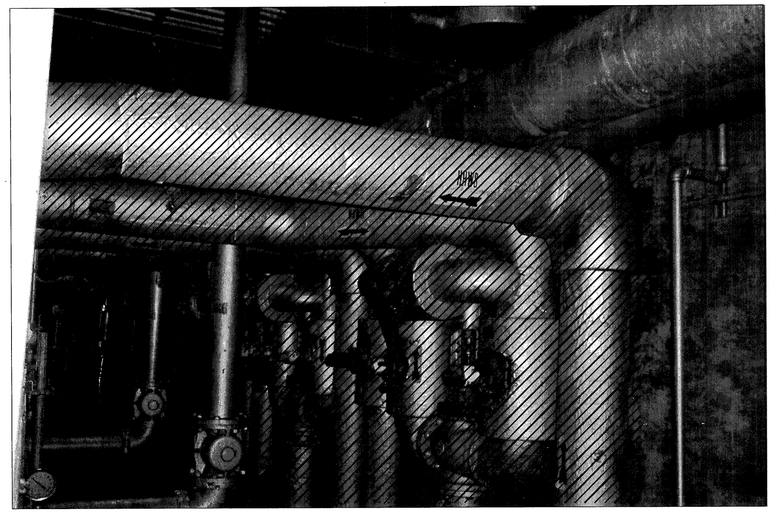

PHOTO 3 (SEE NOTE 1)

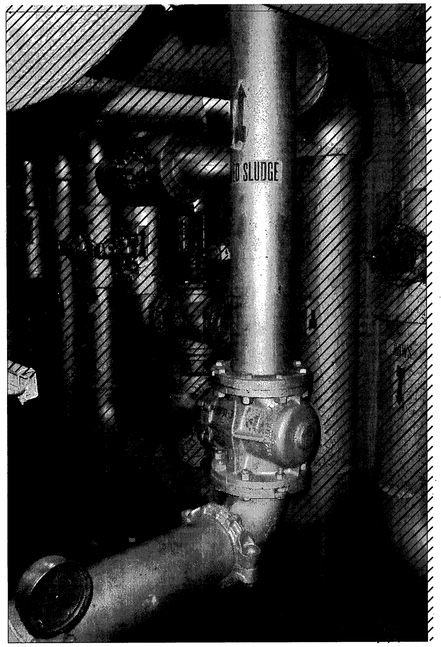

PHOTO 3 (SEE NOTE 1)

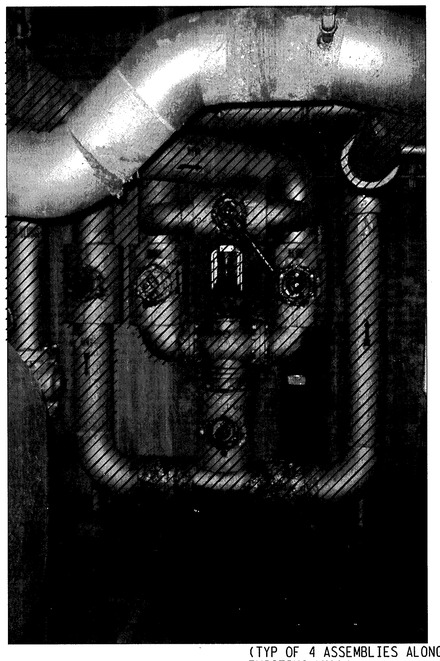

(TYP OF 4 ASSEMBLIES ALONG EXISTING WALL)

PHOTO 3 (SEE NOTE 1)

BY CONSULTANT
29-JUL-2003 17:27
P:\scad\23011-EBMUD\sANewDGN\274M130.R00

REGISTERED PROFESSIONAL ENGINEER TRACY MARIE STUCKERS No. C35503 Exp. 09-30-03 CIVIL STATE OF CALIFORNIA

REGISTERED PROFESSIONAL ENGINEER JAMES L. BARTLETT No. 23550 Exp. 09-30-05 MECHANICAL STATE OF CALIFORNIA

3" ON ORIGINAL DOCUMENT
0 1 2 3

NO.	DATE	BY	REC.

BROWN AND CALDWELL

DESIGNED BY AOR	PROJECT ENGR. R.P.E. NO.
DESIGN CHECKED BY JLB	PROJECT MGR. DONALD KIANG R.P.E. NO. C29341
DRAWN BY HK	
SR. PROJ ENGR. R.P.E. NO. C35503	
APPROVED TMS	RECOMMENDED SR. ENGR. OLUJIMI YOLOYE R.P.E. NO. C44218
PRINCIPAL IN CHARGE, R.P.E. NO. C35503	

EBMUD REVIEW

EAST BAY MUNICIPAL UTILITY DISTRICT
SPECIAL DISTRICT No. 1
OAKLAND, CALIFORNIA

MWWTP
DIGESTER HEATING SYSTEM IMPROVEMENTS
MECHANICAL
EQUIPMENT BUILDING 2
BASEMENT LEVEL DEMOLITION PLAN AND SECTIONS

FACILITY: MWWTP	DRAWING No. SD274-M-130
SCALE: 1/4" = 1'-0	
DATE: APRIL 2003	SHEET 19 OF 44

SPECIFICATION NO: SD274

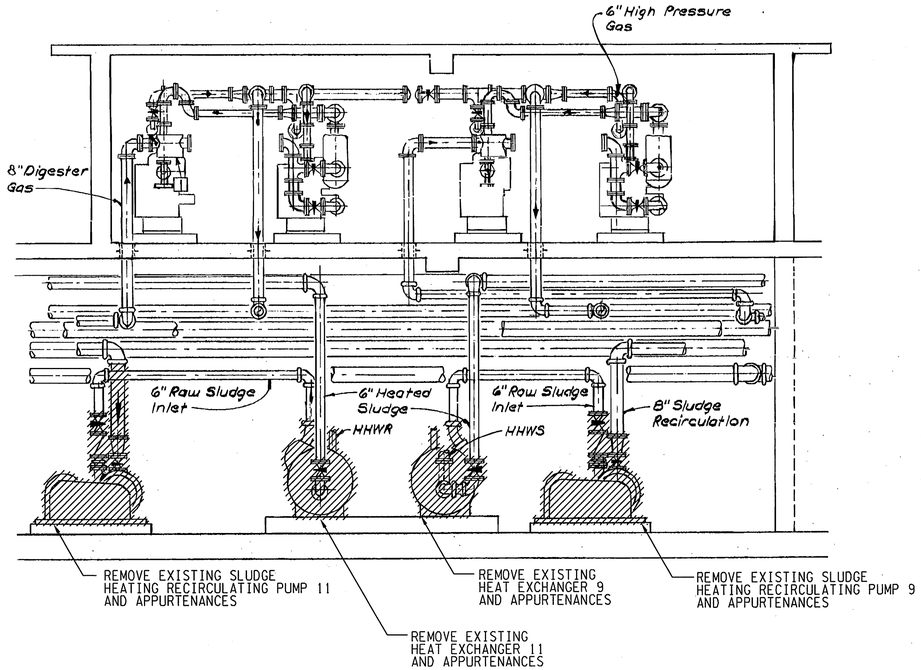

SECTION B
1/4" = 1'-0
M-130

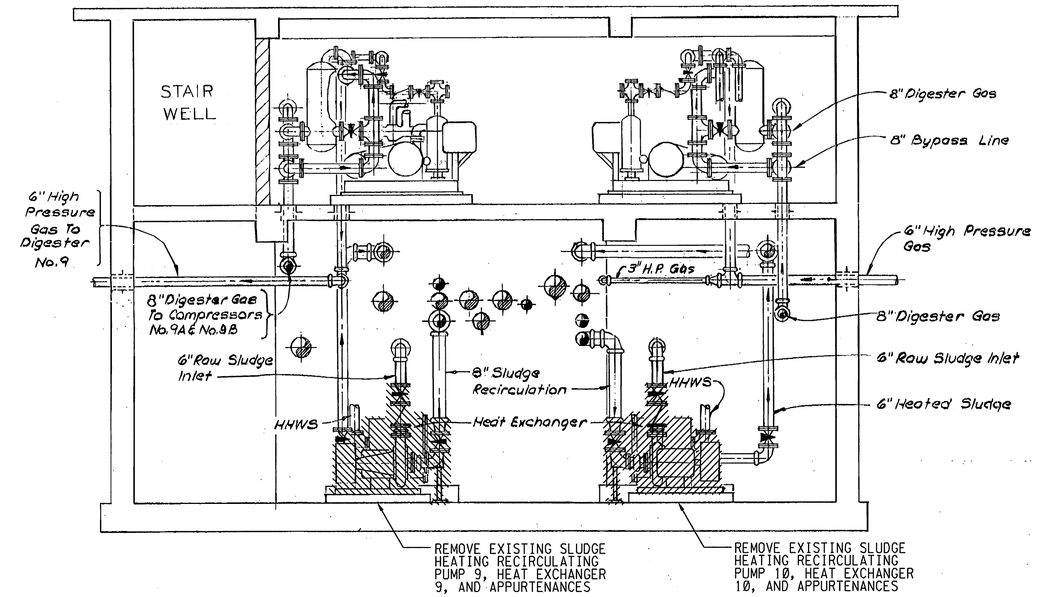

SECTION C
1/4" = 1'-0
M-130

BY CONSULTANT
29-JUL-2003 17:29
P:<cad<23011-EBMUD<aNewDGN<274M131.R00

REGISTERED PROFESSIONAL ENGINEER
TRACY MARIE STUDERS
No. C35503
Exp. 09-30-03
CIVIL
STATE OF CALIFORNIA

REGISTERED PROFESSIONAL ENGINEER
JAMES L. BARTLETT
No. 23550
Exp. 09-30-05
MECHANICAL
STATE OF CALIFORNIA

3" ON ORIGINAL DOCUMENT
0 1 2 3

NO.	DATE		BY	REC.

BROWN AND CALDWELL

DESIGNED BY ADR
DESIGN CHECKED BY JLB
DRAWN BY HK
SR. PROJ ENGR. R.P.E. NO. C35503
APPROVED TWS
PRINCIPAL IN CHARGE, R.P.E. NO. C35503

EBMUD REVIEW
PROJECT ENGR. R.P.E. NO.
PROJECT MGR. DONALD KIANG R.P.E. NO. C29341
RECOMMENDED SR. ENGR. OLUJIMI YOLOYE R.P.E. NO. C44278

EAST BAY MUNICIPAL UTILITY DISTRICT
SPECIAL DISTRICT No. 1
OAKLAND, CALIFORNIA

MWWTP
DIGESTER HEATING SYSTEM IMPROVEMENTS
MECHANICAL
EQUIPMENT BUILDING 2
BASEMENT LEVEL DEMOLITION PLAN AND SECTIONS

FACILITY: MWWTP
SCALE: 1/4" =1'-0
DATE: APRIL 2003
DRAWING No. SD274-M-131
SHEET 20 OF 44

SPECIFICATION NO: SD274

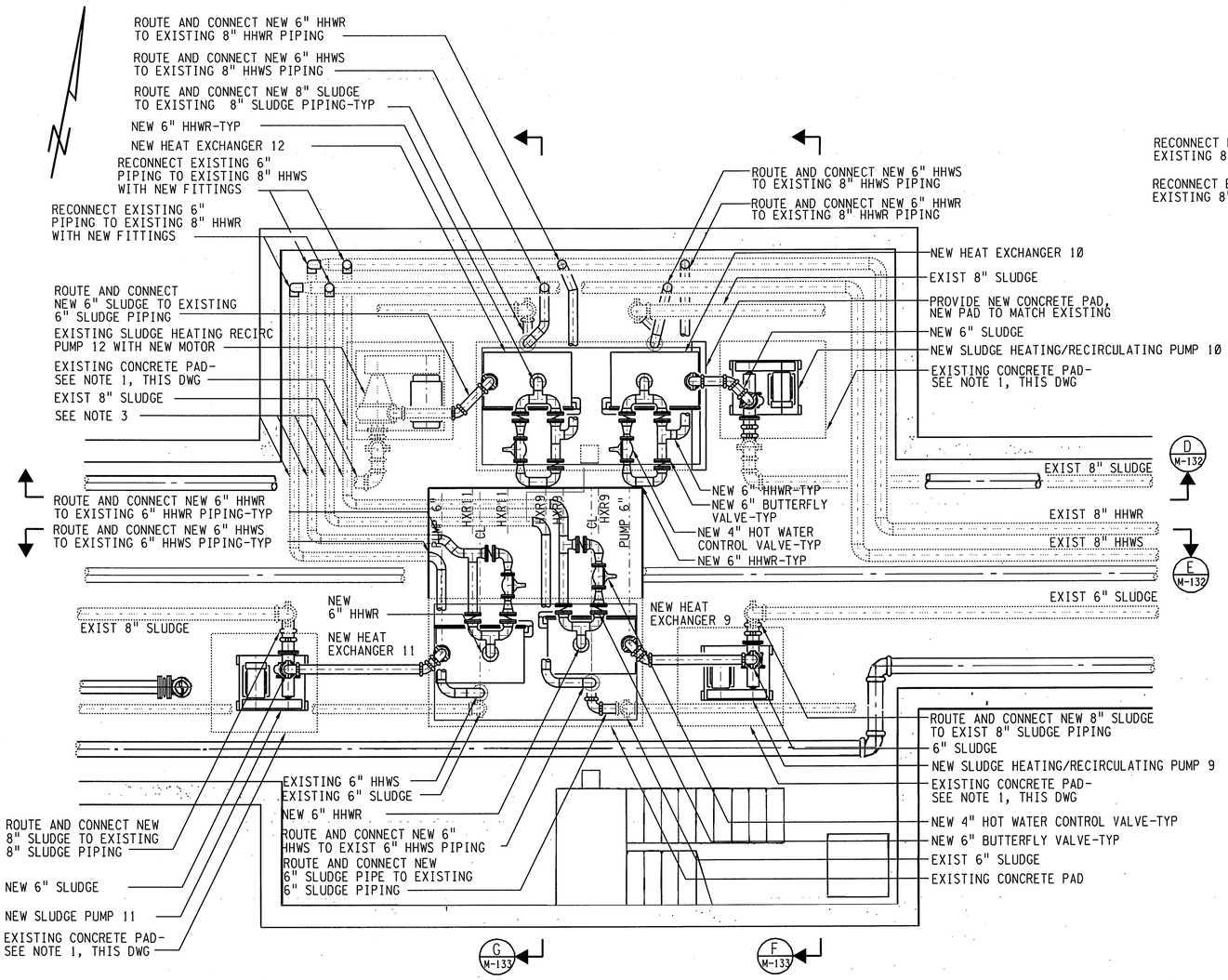

PARTIAL PLAN
1/4" = 1'-0

NOTES:

1. FOR EXISTING CONCRETE PAD MODIFICATION SEE DETAIL ON DWG M-100.
2. ALL EXISTING EQUIPMENT AND PIPING SHOWN IN THIS DRAWING MAY NOT REFLECT THE ACTUAL ORIENTATIONS, LOCATIONS, AND, ELEVATIONS. THE CONTRACTOR SHALL FIELD VERIFY ALL EXISTING CONDITIONS OF EQUIPMENT AND PIPING PRIOR AND DURING CONSTRUCTION.
3. RE-USE EXISTING 6" PIPING AND CHANGE PIPING DESIGNATIONS AS SHOWN ON SECTION 'E', THIS DRAWING.
4. INSTALL NEW MOTOR BELTS AND SHEAVES FOR SLUDGE PUMP 12.
5. SEE NOTE 6 ON DWG M-104.

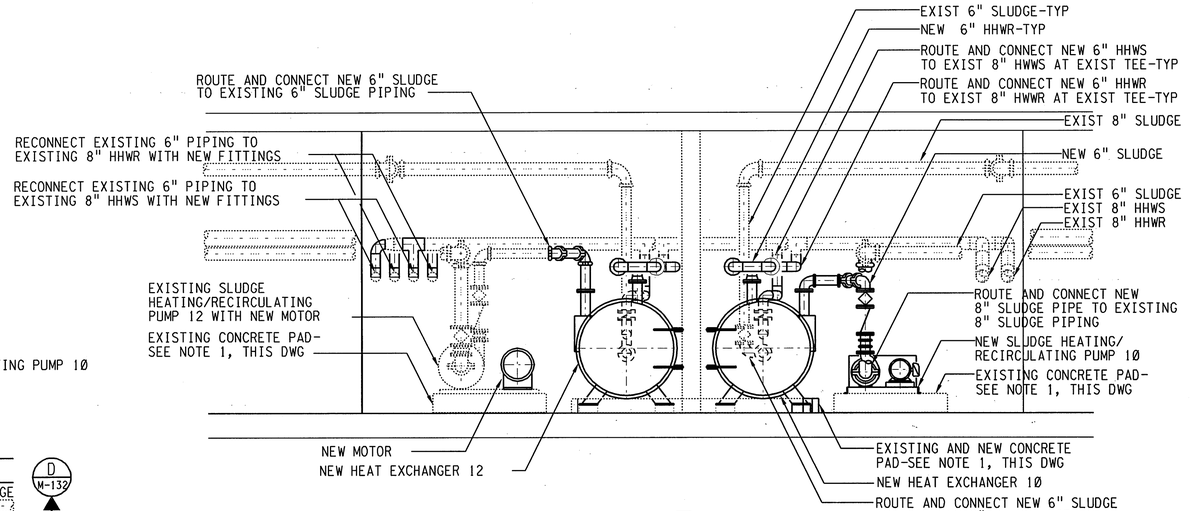

SECTION D M-132
1/4" = 1'-0

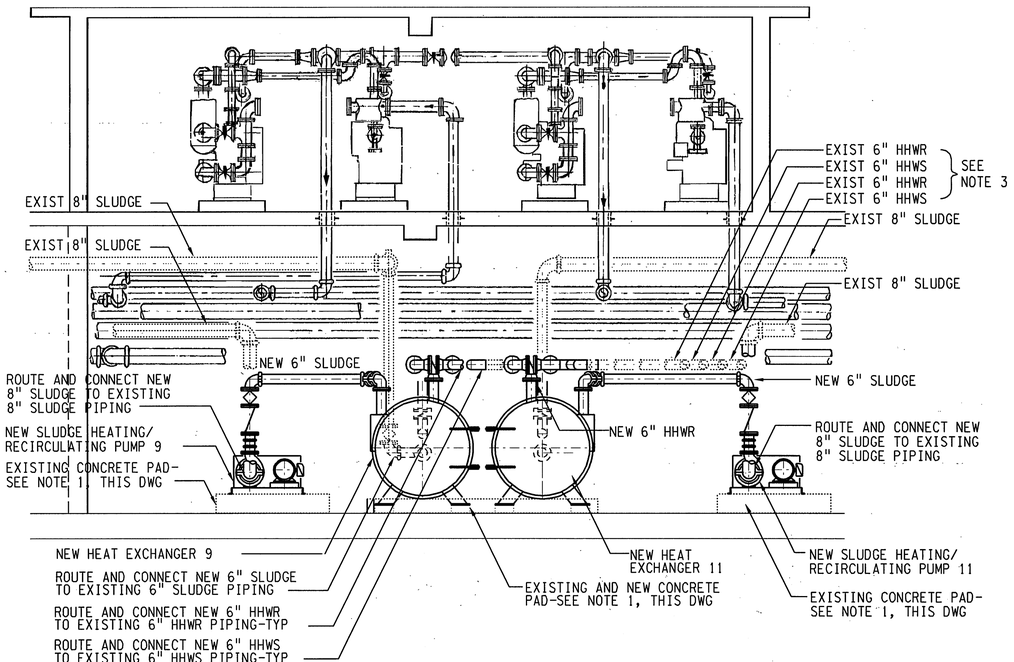

SECTION E M-132
1/4" = 1'-0

BY CONSULTANT
29-JUL-2003 17:30
P:<cad<23011-EBMUD<ANewDGN<274M132.R00

REGISTERED PROFESSIONAL ENGINEER — TRACY MARIE STIDERS — No. C35503 — Exp. 09-30-03 — CIVIL — STATE OF CALIFORNIA

REGISTERED PROFESSIONAL ENGINEER — JAMES L. BARTLETT — No. 23550 — Exp. 09-30-05 — MECHANICAL — STATE OF CALIFORNIA

3" ON ORIGINAL DOCUMENT
0 1 2 3

NO.	DATE		BY	REC.

BROWN AND CALDWELL

DESIGNED BY ADR
DESIGN CHECKED BY JLB
DRAWN BY HK
SR. PROJ ENGR. R.P.E. NO. C35503
APPROVED TWS
PRINCIPAL IN CHARGE, R.P.E. NO. C35503

EBMUD REVIEW
PROJECT ENGR. R.P.E. NO.
PROJECT MGR. DONALD KIANG R.P.E. NO. C29341
RECOMMENDED SR. ENGR. OLUJIMI YOLOYE R.P.E. NO. C44278

EAST BAY MUNICIPAL UTILITY DISTRICT
SPECIAL DISTRICT No. 1
OAKLAND, CALIFORNIA

MWWTP
DIGESTER HEATING SYSTEM IMPROVEMENTS
MECHANICAL
EQUIPMENT BUILDING 2
BASEMENT LEVEL MODIFICATION PLAN AND SECTIONS

FACILITY: MWWTP
SCALE: 1/4" = 1'-0
DATE: APRIL 2003
DRAWING No. SD274-M-132
SHEET 21 OF 44
SPECIFICATION NO: SD274

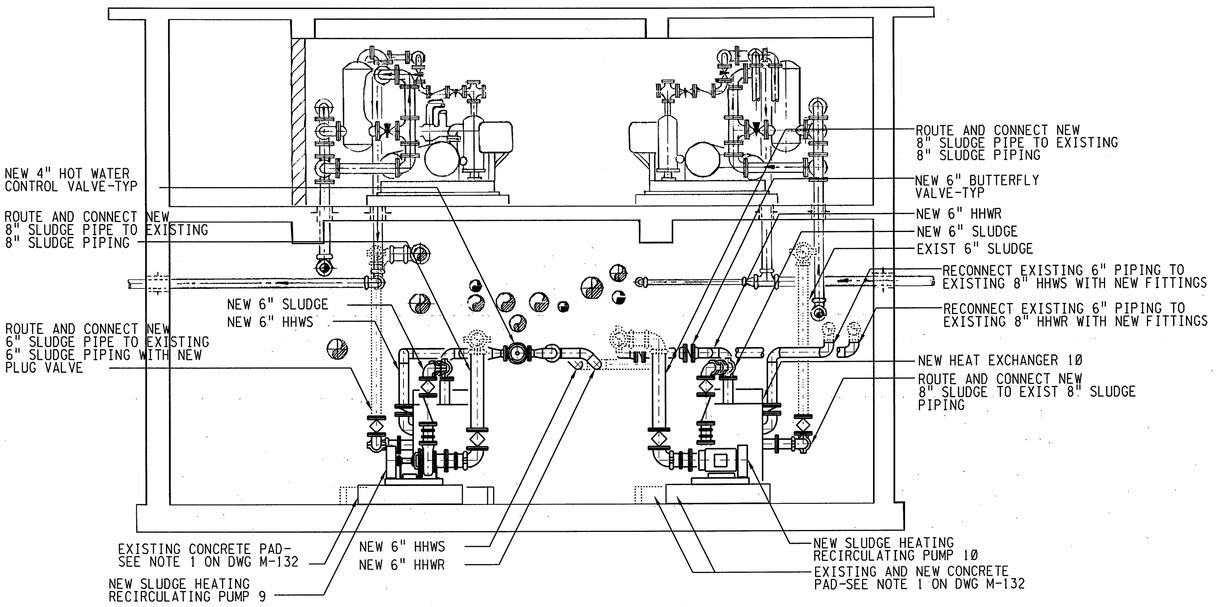

SECTION F M-132
1/4" = 1'-0

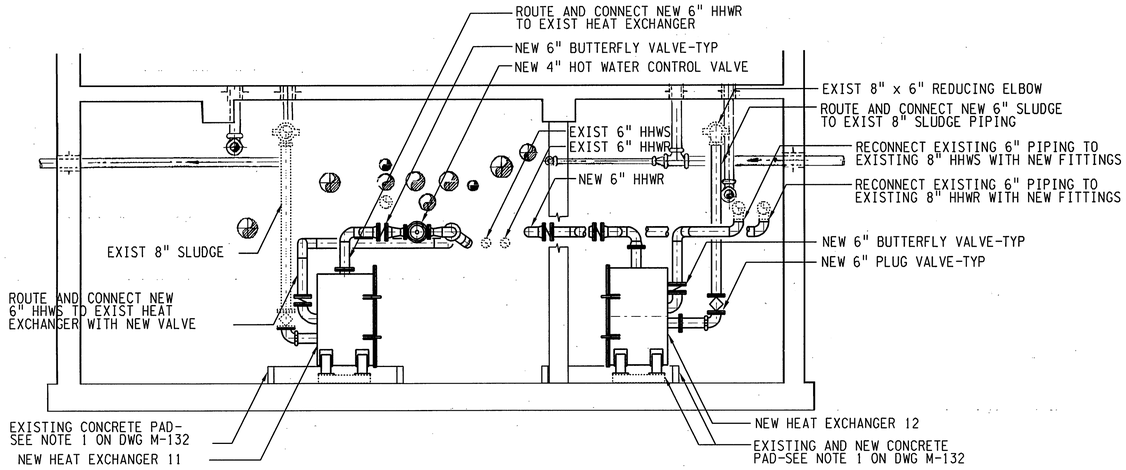

SECTION G M-132
1/4" = 1'-0

BY CONSULTANT
29-JUL-2003 17:32
P:\cad\23011-EBMUD\ANewDGN\274M133.R00

REGISTERED PROFESSIONAL ENGINEER
TRACY MARIE STORROS
No. C35503
Exp. 09-30-03
CIVIL
STATE OF CALIFORNIA

REGISTERED PROFESSIONAL ENGINEER
JAMES L. BARTLETT
No. 23550
Exp. 09-30-05
MECHANICAL
STATE OF CALIFORNIA

3" ON ORIGINAL DOCUMENT
Ø 1 2 3

NO.	DATE		BY	REC.

BROWN AND CALDWELL

DESIGNED BY ADR	PROJECT ENGR. R.P.E. NO.
DESIGN CHECKED BY JLB	
DRAWN BY HK	PROJECT MGR. DONALD KIANG R.P.E. NO. C29341
SR. PROJ ENGR. R.P.E. NO. C35503	
APPROVED TMS	RECOMMENDED SR. ENGR. OLUJIMI YOLOYE R.P.E. NO. C44278
PRINCIPAL IN CHARGE, R.P.E. NO. C35503	

EBMUD REVIEW

EAST BAY MUNICIPAL UTILITY DISTRICT
SPECIAL DISTRICT No. 1
OAKLAND, CALIFORNIA

MWWTP
DIGESTER HEATING SYSTEM IMPROVEMENTS
MECHANICAL
EQUIPMENT BUILDING 2
BASEMENT LEVEL MODIFICATION SECTIONS

FACILITY: MWWTP	DRAWING No. SD274-M-133
SCALE: 1/4" = 1'-0	
DATE: APRIL 2003	SHEET 22 OF 44

SPECIFICATION NO: SD274

EQUIPMENT

- MOTOR
- PUMP, CENTRIFUGAL
- HEAT EXCHANGER, SPIRAL TYPE
- AFD — ADJUSTABLE DRIVE FREQUENCY

PIPELINE DEVICES

- BUTTERFLY VALVE
- BALL VALVE (NORMALLY OPEN)
- PLUG VALVE (NORMALLY OPEN)
- PLUG VALVE (NORMALLY CLOSED)
- THREE WAY VALVE
- CAP OR PLUG
- SUCTION DIFFUSER
- TRIPLE DUTY VALVE
- PI — PRESSURE INDICATOR
- HOT WATER CONTROL VALVE (GLOBE)
- REDUCER / INCREASER

PROCESS LINES

- NEW PRIMARY PROCESS FLOW
- NEW SECONDARY PROCESS FLOW
- EXISTING PROCESS FLOW, EQUIPMENT, OR SIGNAL PATH
- NEW/EXISTING CONNECTIONS
- ENCLOSURE BOUNDARY OR CONTROL SIGNAL

PROCESS AND SIGNAL CROSS REFERENCE SYSTEM

LINE CROSS REFERENCE
SYMBOL LOCATION IDENTIFICATION LETTERS

TO/FROM SYMBOL EXAMPLES

(DWG P1Ø1) P1Ø2 (TO) (DWG P1O2) P1Ø1 (FROM)

DEFINES A LINE CONTINUING FROM DRAWING "P1Ø1"

(DWG P1Ø1) P1Ø2 (FROM) (DWG P1O2) P1Ø1 (TO)

DEFINES A LINE CONTINUING FROM DRAWING "P1Ø2"

PHOTOS

1 — PHOTO NUMBER
ARROW HEAD INDICATES DIRECTION TAKEN

BY CONSULTANT
29-JUL-2003 17:33
P:\sdd\23011-EBMUD\4NewDGN\s274p100.R00

REGISTERED PROFESSIONAL ENGINEER — TRACY MARIE STICKERS — No. C35503 Exp. 09-30-03 — CIVIL — STATE OF CALIFORNIA

REGISTERED PROFESSIONAL ENGINEER — JAMES L. BARTLETT — No. 23550 Exp. 09-30-05 — MECHANICAL — STATE OF CALIFORNIA

3" ON ORIGINAL DOCUMENT
Ø 1 2 3

NO.	DATE		BY	REC.

BROWN AND CALDWELL

DESIGNED BY JLB	PROJECT ENGR. R.P.E. NO.
DESIGN CHECKED JLB	PROJECT MGR. DONALD KIANG R.P.E. NO. C 29341
DRAWN BY HK	
SR. PROJ ENGR. R.P.E. NO. C35503	RECOMMENDED SR. ENGR. OLUJIMI YOLOYE R.P.E. NO. C 44278
APPROVED TMS	
PRINCIPAL IN CHARGE, R.P.E. NO. C35503	

EBMUD REVIEW

EAST BAY MUNICIPAL UTILITY DISTRICT
SPECIAL DISTRICT No. 1
OAKLAND, CALIFORNIA

MWWTP
DIGESTER HEATING SYSTEM IMPROVEMENTS
P&ID

PROCESS SYMBOLS

FACILITY: MWWTP	DRAWING No. SD274-P-1Ø0
SCALE: NO SCALE	
DATE: APRIL 2003	SHEET 3 OF 44

SPECIFICATION NO: SD274

NOTE:

1. THIS DRAWING DEPICTS THE EXISTING HOT WATER SYSTEM. IT IS FOR REFERENCE ONLY. THE MODIFIED SYSTEM SCHEMATIC IS SHOWN ON THE FOLLOWING DRAWINGS.

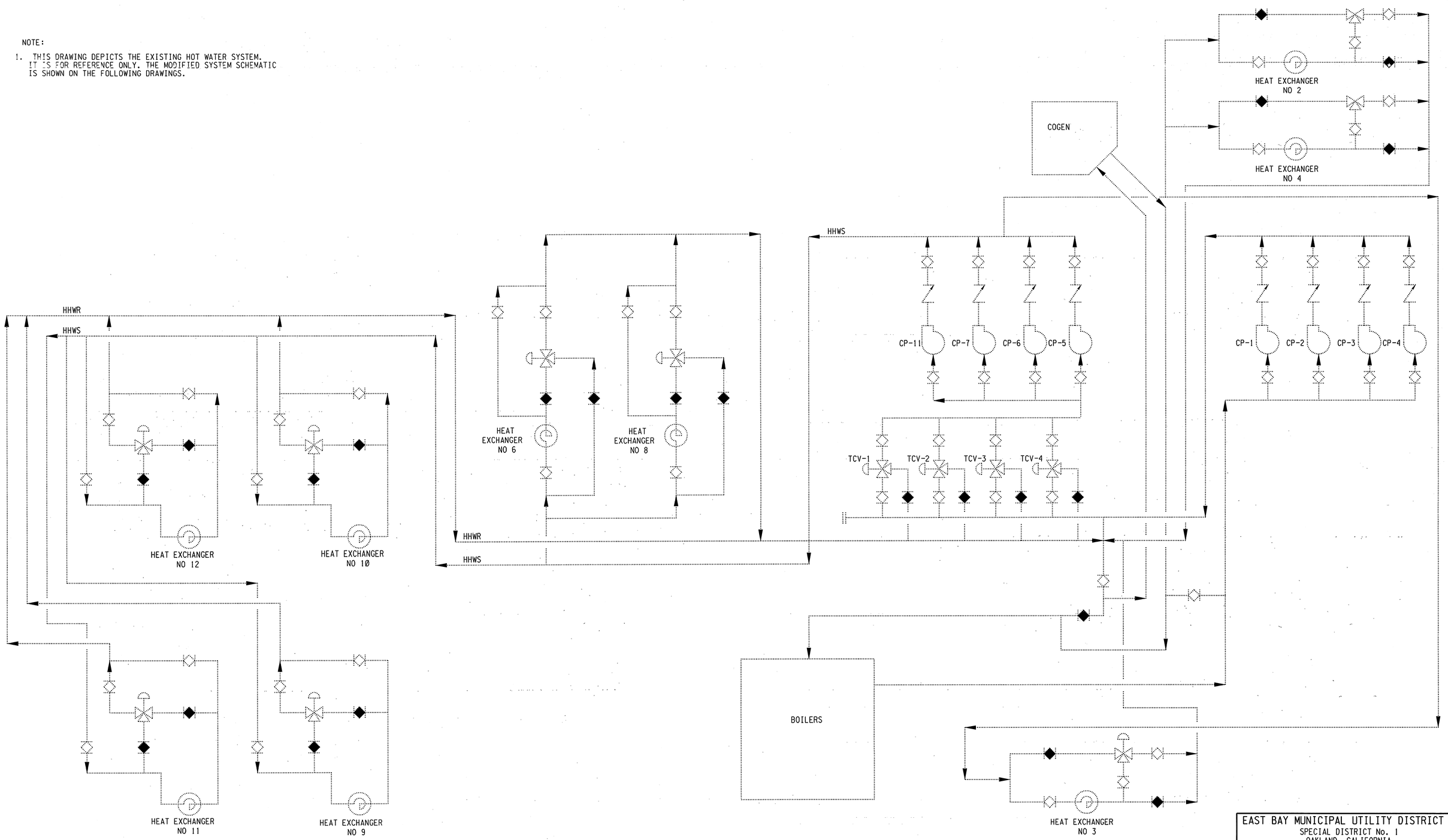

BY CONSULTANT
29-JUL-2003 17:34
P:\cad\230111-EBMUD\sANewDGN\s274P101.R00

REGISTERED PROFESSIONAL ENGINEER
TRACY MARIE STICKERT
No. C35503
Exp. 09-30-03
CIVIL
STATE OF CALIFORNIA

REGISTERED PROFESSIONAL ENGINEER
JAMES L. BARTLETT
No. 23550
Exp. 09-30-05
MECHANICAL
STATE OF CALIFORNIA

3" ON ORIGINAL DOCUMENT
0 1 2 3

NO.	DATE		BY	REC.

BROWN AND CALDWELL

DESIGNED BY ADR
DESIGN CHECKED BY JLB
DRAWN BY HK
SR. PROJ ENGR. R.P.E. NO. C35503
APPROVED TMS
PRINCIPAL IN CHARGE, R.P.E. NO. C35503

EBMUD REVIEW
PROJECT ENGR. R.P.E. NO.
PROJECT MGR, DONALD KIANG R.P.E. NO. C29341
RECOMMENDED SR. ENGR. OLUJIMI YOLOYE R.P.E. NO. C44270

EAST BAY MUNICIPAL UTILITY DISTRICT
SPECIAL DISTRICT No. 1
OAKLAND, CALIFORNIA

MWWTP
DIGESTER HEATING SYSTEM IMPROVEMENTS
P&ID
EXISTING HOT WATER SYSTEM SCHEMATIC

FACILITY: MWWTP
SCALE: NO SCALE
DATE: APRIL 2003
DRAWING No. SD274-P-101
SHEET 4 OF 44

SPECIFICATION NO: SD274

NOTE:

1. SEE DWG I101 FOR PRIMARY PUMP SPEED CONTROL AND HOT WATER LOOP TEMPERATURE CONTROL.

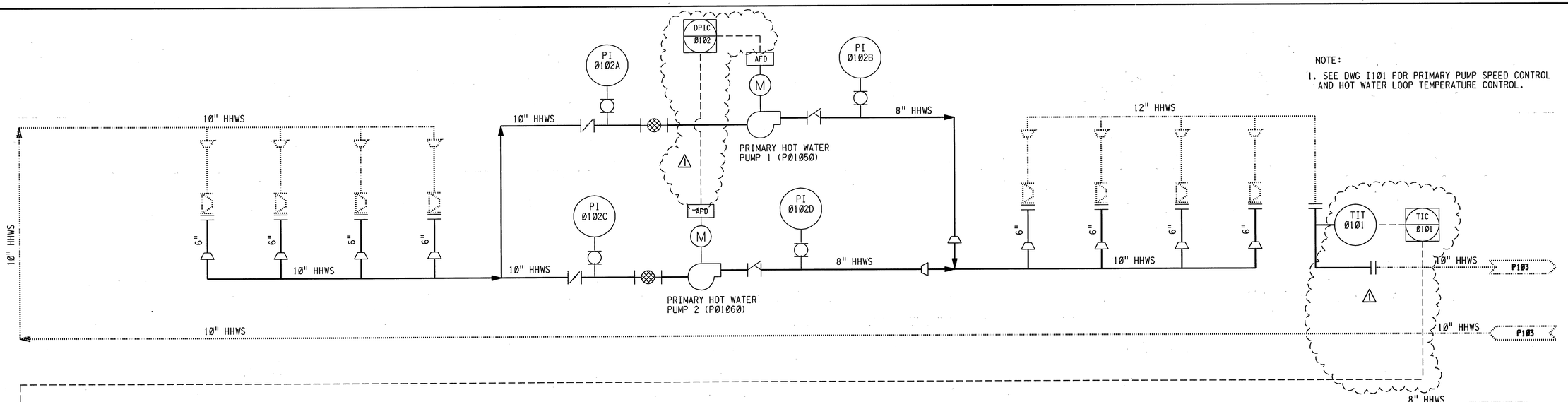

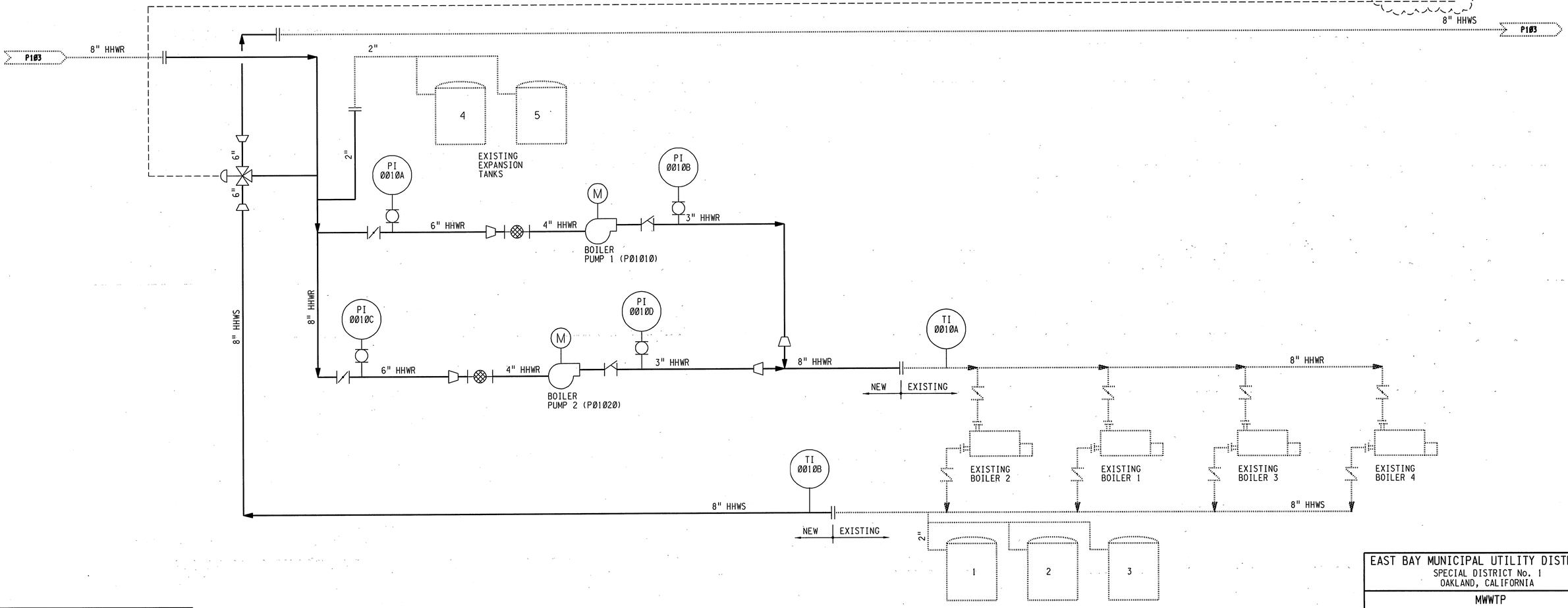

BY CONSULTANT
29-JUL-2003 18:08
P:\cad\e23011-EBMUD\aNewDGN\274P102.R01

REGISTERED PROFESSIONAL ENGINEER
TRACY MARIE STEERS
No. C35503
Exp. 09-30-03
CIVIL
STATE OF CALIFORNIA

REGISTERED PROFESSIONAL ENGINEER
JAMES L. BARTLETT
No. 23550
Exp. 09-30-05
MECHANICAL
STATE OF CALIFORNIA

3" ON ORIGINAL DOCUMENT
0 1 2 3

NO.	DATE		BY	REC.
1	5/03	ADDENDUM No.1	RPA	

BROWN AND CALDWELL

DESIGNED BY ADR
DESIGN CHECKED BY JLB
DRAWN BY HK
SR. PROJ ENGR. R.P.E. NO. C35503
APPROVED TMS
PRINCIPAL IN CHARGE, R.P.E. NO. C35503

EBMUD REVIEW
PROJECT ENGR. R.P.E. NO.
PROJECT MGR. DONALD KIANG R.P.E. NO. C29341
RECOMMENDED SR. ENGR. OLUJIMI YOLOYE R.P.E. NO. C44278

EAST BAY MUNICIPAL UTILITY DISTRICT
SPECIAL DISTRICT No. 1
OAKLAND, CALIFORNIA

MWWTP
DIGESTER HEATING SYSTEM IMPROVEMENTS
P&ID
DIGESTER HOT WATER SYSTEM 1
SCHEMATIC

FACILITY: MWWTP
SCALE: NO SCALE
DATE: APRIL 2003
DRAWING NO. SD274-P-102
SHEET 5 OF 44

SPECIFICATION NO: SD274

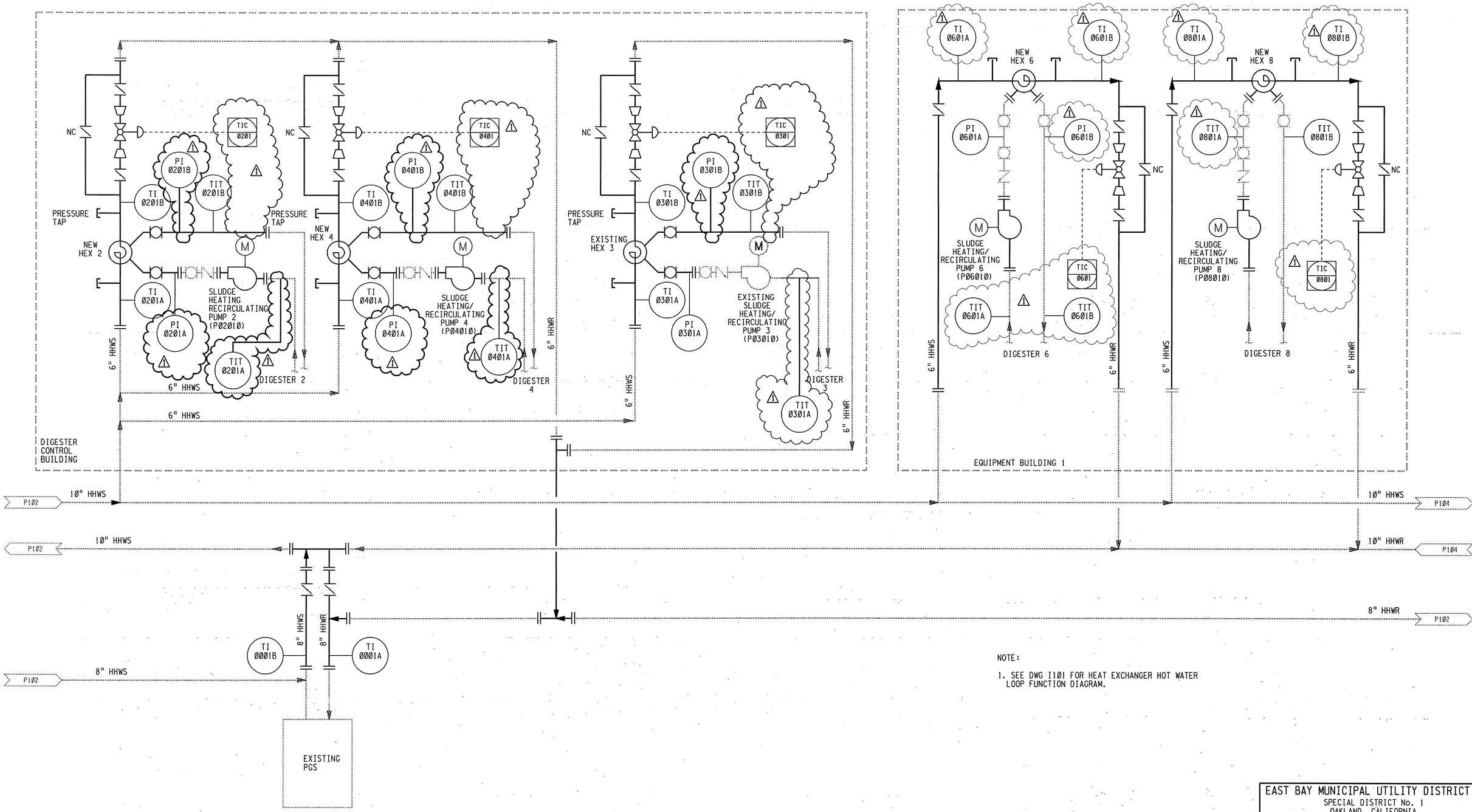

NOTE:

1. SEE DWG I101 FOR HEAT EXCHANGER HOT WATER LOOP FUNCTION DIAGRAM.

BY CONSULTANT
29-JUL-2003 18:09
P:≤cad≤23011-EBMUD≤ANewDGN≤274P103.R01

REGISTERED PROFESSIONAL ENGINEER TRACY MARIE STIGERS No. C35503 Exp. 09-30-03 CIVIL STATE OF CALIFORNIA

REGISTERED PROFESSIONAL ENGINEER JAMES L. BARTLETT No. 23550 Exp. 09-30-05 MECHANICAL STATE OF CALIFORNIA

3" ON ORIGINAL DOCUMENT
0 1 2 3

NO.	DATE		BY	REC.
1	5/03	ADDENDUM No.1	RPA	

BROWN AND CALDWELL

DESIGNED BY ADR
DESIGN CHECKED BY JLB
DRAWN BY HK
SR. PROJ ENGR. R.P.E. NO. C35503
APPROVED TMS
PRINCIPAL IN CHARGE, R.P.E. NO. C35503

EBMUD REVIEW
PROJECT ENGR. R.P.E. NO.
PROJECT MGR. DONALD KIANG R.P.E. NO. C29341
RECOMMENDED SR. ENGR. OLUJIMI YOLOYE R.P.E. NO. C44278

EAST BAY MUNICIPAL UTILITY DISTRICT
SPECIAL DISTRICT No. 1
OAKLAND, CALIFORNIA

MWWTP
DIGESTER HEATING SYSTEM IMPROVEMENTS
P&ID
DIGESTER HOT WATER SYSTEM 2
SCHEMATIC

FACILITY: MWWTP
SCALE: NO SCALE
DATE: APRIL 2003
DRAWING No. SD274-P-103
SHEET 6 OF 44
SPECIFICATION NO: SD274

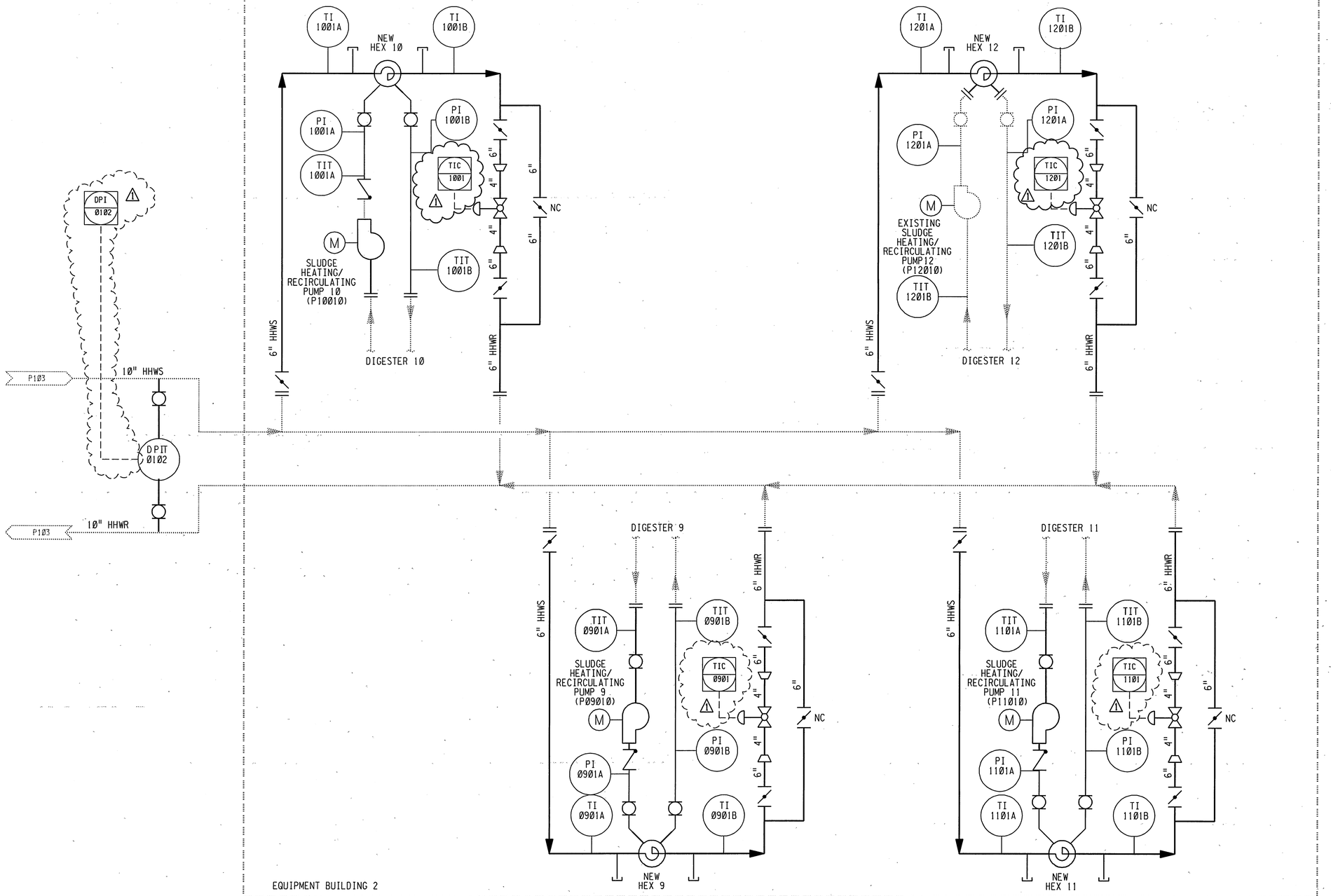

NOTE:

1. SEE DWG I101 FOR HEAT EXCHANGER HOT WATER LOOP AND DIGESTER HHWS PRESSURE LOOP FUNCTION DIAGRAMS.

BY CONSULTANT
29-JUL-2003 18:10
P:\cad\s23011-EBMUD\sANewDGN\s274P104.R01

REGISTERED PROFESSIONAL ENGINEER
TRACY MARIE STICKERS
No. C35503
Exp. 09-30-03
CIVIL
STATE OF CALIFORNIA

REGISTERED PROFESSIONAL ENGINEER
JAMES L. BARTLETT
No. 23550
Exp. 09-30-05
MECHANICAL
STATE OF CALIFORNIA

3" ON ORIGINAL DOCUMENT
0 1 2 3

NO.	DATE		BY	REC.
1	5/03	ADDENDUM No.1	RPA	

BROWN AND CALDWELL

DESIGNED BY ADR	
DESIGN CHECKED BY JLB	
DRAWN BY HK	
SR. PROJ ENGR. R.P.E. NO. C35503	
APPROVED TMS	
PRINCIPAL IN CHARGE, R.P.E. NO. C35503	

EBMUD REVIEW

PROJECT ENGR. R.P.E. NO.	
PROJECT MGR. DONALD KIANG R.P.E. NO. C29341	
RECOMMENDED SR. ENGR. OLUJIMI YOLOYE R.P.E. NO. C44218	

EAST BAY MUNICIPAL UTILITY DISTRICT
SPECIAL DISTRICT No. 1
OAKLAND, CALIFORNIA

MWWTP
DIGESTER HEATING SYSTEM IMPROVEMENTS
P&ID
DIGESTER HOT WATER SYSTEM 3
SCHEMATIC

FACILITY: MWWTP	DRAWING No. SD274-P-104
SCALE: NO SCALE	
DATE: APRIL 2003	SHEET 7 OF 44

SPECIFICATION NO: SD274